APPENDIX L

GRAVITY-WARM-AIR HEATING SYSTEM DESIGN

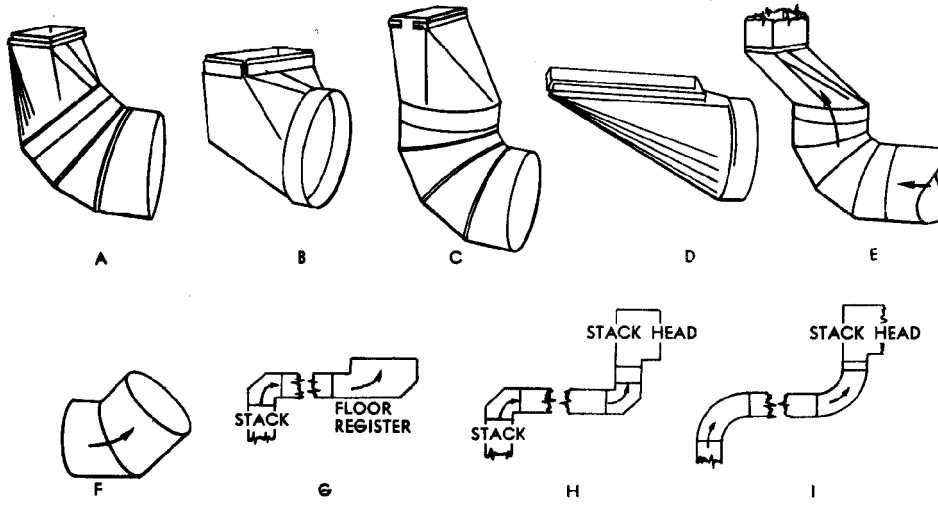

Figure L-1. Gravity duct fittings.

Table L-1. Equivalent Lengths of Gravity Duct Fittings (See fig. L-1).

Warm air boot	Name of combination	Equivalent No. of 90° elbows
A	45° angle boot and 45° elbow	1
B	90° angle boot	1
C	Universal boot and 90° elbow	1
D	End boot	2
E	Offset boot	2½
F	45° angle	½
G	Floor register-second story	3
H	Offset	3
I	Offset	2

Table L-2. First Floor Supply Duct Sizes [a]

Combination No.	Leader pipe diameter, in.	Register, size, in.			
		Floor	Baseboard		
			Size	Extension	Throat size
1	8	8 x 10	10 x 8	2¼	6⅛ x 10
2	9	9 x 12	12 x 8	2½	6⅛ x 12
3	10	10 x 12	12 x 9	3¼	7⅛ x 12
4	12	12 x 14	13 x 11	5¼	9⅛ x 13
5	14	14 x 16	----------	----------	----------

[a] When the calculations indicate a requirement for a given room greater than Combination No. 4, two or more smaller units totalling the required capacity are recommended.

Table L-3. Second Floor Supply Duct Sizes

Combination No.	Leader pipe diameter in.	Stack [a] size in.	Register size, in.			
			Floor	Baseboard		
				Size	Extension	Sidewall
11	8	10 x 3¼	8 x 10	10 x 8	2¼	10 x 8
12	9	12 x 3¼	9 x 12	12 x 8	2¼	12 x 8
14	10	14 x 3¼	10 x 14	13 x 11	2¼	----------
15	12	12 x 5¼	----------	12 x 9	3¼	----------
16	12	14 x 5¼	----------	13 x 11	5¼	----------

[a] Recommended stack sizes. Tables may also be applied to 3-inch and 3½-inch stack depths.

Table L-4. Return Duct Sizes

Combination no.	Duct dia. in.	Duct area sq. in.	Area at shoe connection, sq. in.	Metal grill sizes			Baseboard intake for first story	When joist lining is used [a]		When duct is used
				Choose one				No. of joists lined	Min.[b] depth in.	Choose one
				A	B	C				
31	10	78			8 x 14	10 x 12		1	7	14 x 6 12 x 8
32	12	113		6 x 30	8 x 24	12 x 14	14 x 10 4-In. ext.	1 or 2	9 5	12 x 6 16 x 8
33	14	154	170	8 x 30	10 x 24	14 x 16		1 or 6	12 6	28 x 6 22 x 8
34	16	201	220	10 x 30	12 x 24		30 x 10 4-In. ext.	1 or 2	16 8	28 x 6 22 x 8
35	18	254	280	12 x 30	14 x 24			2	10	36 x 8 28 x 10
36	20	314	340	14 x 30	18 x 24			2	12. 5	36 x 10 30 x 12
37	22	380	420	18 x 30				2	15. 0	42 x 10 36 x 12
38	24	452	500	20 x 30				2	18. 0	42 x 12 36 x 14

[a] Based on 14 in. space between joists. [b] Use full depth of joist except when joist depth is less than minimum depth required. Then pan must be used.

Table L-5. Capacity of Supply Ducts to First Floor[a] in Btu/hr Delivered

Combination No.	No. of elbows	Height from basement floor to bottom of joists—feet	Actual length (bonnet to riser) feet									
		6 6½ 7 7½	4	6	4 8	6 10	4 8 12	6 10 14	4 8 12 16	6 10 14 18	8 12 16 20	10 14 18 22
1			6, 020	5, 850	5, 680	5, 510	5, 340	5, 170	5, 000	4, 830	4, 660	4, 490
2			7, 620	7, 400	7, 180	6, 970	6, 760	6, 540	6, 320	6, 110	5, 890	5, 680
3	1		9, 400	9, 140	8, 870	8, 600	8, 340	8, 070	7, 810	7, 540	7, 270	7, 010
4			13, 350	12, 970	12, 590	12, 210	11, 830	11, 450	11, 080	10, 700	10, 320	9, 950
5			17, 520	17, 020	16, 530	16, 040	15, 550	15, 050	14, 550	14, 050	13, 560	13, 060
1			5, 850	5, 660	5, 450	5, 330	5, 160	5, 000	4, 840	4, 670	4, 510	4, 340
2			7, 360	7, 150	6, 940	6, 730	6, 520	6, 320	6, 110	5, 910	5, 700	5, 500
3	2		9, 090	8, 840	8, 580	8, 320	8, 060	7, 800	7, 550	7, 290	7, 040	6, 780
4			12, 910	12, 540	12, 170	11, 800	11, 430	11, 060	10, 690	10, 320	9, 950	9, 580
5			16, 940	16, 490	15, 990	15, 500	15, 040	14, 550	14, 080	13, 600	13, 120	12, 650
1			5, 620	5, 460	5, 310	5, 150	4, 990	4, 830	4, 670	4, 510	4, 350	4, 190
2			7, 120	6, 910	6, 710	6, 510	6, 310	6, 110	5, 900	5, 700	5, 500	5, 300
3	3		8, 780	8, 530	8, 280	8, 030	7, 780	7, 530	7, 290	7, 040	6, 800	6, 550
4			12, 450	12, 100	11, 750	11, 400	11, 050	10, 700	10, 350	10, 000	9, 650	9, 300
5			16, 360	15, 900	15, 440	14, 970	14, 510	14, 050	13, 600	13, 130	12, 660	12, 200
1			5, 420	5, 260	5, 110	4, 960	4, 800	4, 650	4, 500	4, 350	4, 190	4, 040
2			6, 860	6, 660	6, 460	6, 270	6, 080	5, 890	5, 690	5, 500	5, 300	5, 110
3	4		8, 460	8, 220	7, 980	7, 740	7, 500	7, 260	7, 020	6, 780	6, 550	6, 310
4			12, 010	11, 670	11, 330	10, 990	10, 650	10, 310	9, 970	9, 630	9, 290	8, 950
5			15, 770	15, 320	14, 880	14, 420	13, 990	13, 540	13, 100	12, 650	12, 200	11, 750
1			5, 240	5, 090	4, 940	4, 790	4, 640	4, 500	4, 350	4, 200	4, 050	3, 910
2			6, 630	6, 440	6, 250	6, 060	5, 880	5, 690	5, 500	5, 320	5, 130	4, 940
3	5		8, 180	7, 950	7, 720	7, 490	7, 260	7, 030	6, 800	6, 560	6, 330	6, 100
4			11, 610	11, 290	10, 950	10, 620	10, 300	9, 970	9, 640	9, 320	8, 990	8, 660
5			15, 250	14, 800	14, 380	13, 950	13, 520	13, 090	12, 650	12, 230	11, 800	11, 370

[a] Carrying capacity and length of run increased with basement depth. Length of trunk and carrying capacity of gravity extended plenum installations should be based on the 6-foot basement depth capacities.

Table L-6. Capacity of Supply Ducts to Second Floor[a] in btu/hr Delivered

Combination No.	No. of elbows	Height from basement floor to bottom of joists (feet)	Actual length (bonnet to riser) feet										
		6 6½ 7 7½	---------- ---------- ---------- 4	---------- ---------- 4 6	---------- 4 6 8	4 6 8 10	6 8 10 12	8 10 12 14	10 12 14 16	12 14 16 18	14 16 18 20	16 18 20 22	18 20 22 24
11 or 22	------		8,370	8,140	7,900	7,670	7,430	7,190	6,950	6,710	6,470	6,240	6,000
12 or 24	------		10,040	9,760	9,470	9,190	8,900	8,620	8,330	8,050	7,770	7,480	7,200
14	1		11,710	11,380	11,050	10,720	10,390	10,060	9,720	9,390	9,060	8,730	8,400
15	------		16,200	15,750	15,300	14,840	14,380	13,920	13,460	13,000	12,550	12,100	11,640
16	------		18,920	18,390	17,850	17,310	16,780	16,240	15,710	15,180	14,640	14,100	13,570
11 or 22	------		7,940	7,720	7,500	7,280	7,050	6,830	6,600	6,370	6,150	5,930	5,700
12 or 24	------		9,540	9,270	9,000	8,730	8,460	8,190	7,920	7,650	7,380	7,110	6,840
14	2		11,120	10,810	10,500	10,180	9,870	9,550	9,230	8,920	8,610	8,290	7,980
15	------		15,400	14,970	14,530	14,100	13,670	13,230	12,800	12,360	11,930	11,500	11,070
16	------		17,980	17,470	16,960	16,450	15,950	15,430	14,830	14,420	13,910	13,400	12,890
11 or 22	------		7,530	7,320	7,110	6,900	6,680	6,470	6,250	6,040	5,830	5,620	5,400
12 or 24	------		9,030	8,780	8,520	8,270	8,010	7,750	7,500	7,240	6,990	6,730	6,470
14	3		10,530	10,240	9,940	9,650	9,350	9,050	8,750	8,450	8,160	7,860	7,560
15	------		14,580	14,180	13,780	13,370	12,950	12,530	12,120	11,710	11,300	10,890	10,480
16	------		17,040	16,550	16,070	15,580	15,110	14,620	14,140	13,660	13,180	13,700	12,210
11 or 22	------		7,120	6,920	6,720	6,520	6,310	6,110	5,900	5,700	5,500	5,300	5,100
12 or 24	------		8,530	8,290	8,050	7,810	7,570	7,330	7,080	6,840	6,600	6,360	6,120
14	4		9,950	9,670	9,390	9,110	8,830	8,550	8,260	7,980	7,700	7,420	7,140
15	------		13,780	13,390	13,000	12,610	12,220	11,830	11,440	11,050	10,670	10,280	9,890
16	------		16,080	15,620	15,170	14,710	14,260	13,810	13,350	12,900	12,440	11,980	11,530
11 or 22	------		6,700	6,510	6,320	6,130	5,940	5,750	5,560	5,370	5,180	4,990	4,800
12 or 24	------		8,040	7,810	7,580	7,350	7,130	6,900	6,670	6,440	6,220	5,990	5,760
14	5		9,370	9,110	8,850	8,580	8,310	8,050	7,780	7,510	7,250	6,980	6,720
15	------		12,970	12,600	12,240	11,870	11,500	11,140	10,770	10,400	10,040	9,680	9,310
16	------		15,140	14,710	14,280	13,850	13,420	13,000	12,570	12,140	11,710	11,280	10,850

[a] When floor registers are used on second story rooms, include the equivalent elbow resistance for the crossover connection as shown in table L-1.

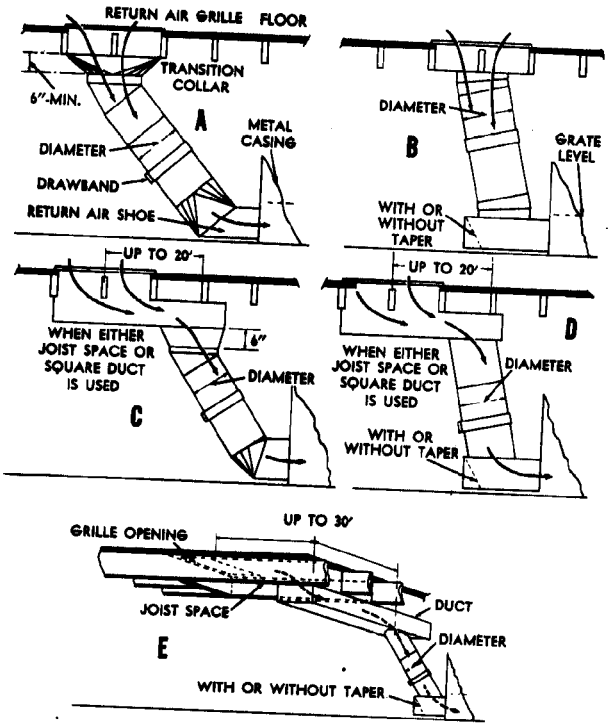

Figure L-2. Return air ducts.

Table L-7. Capacity of Return Air Ducts (see fig. L-2)

Return air combination number	Duct diam. in.	Type A Btuh	Types B and C Btuh	Type D Btuh	Type E Btuh	Return air combination number
31	10	11, 300	9, 500	7, 800	5, 000	31
32	12	16, 300	13, 700	11, 300	7, 200	32
33	14	22, 200	18, 700	15, 300	9, 800	33
34	16	29, 000	24, 400	20, 000	12, 800	34
35	18	36, 700	30, 800	25, 300	16, 200	35
36	20	45, 300	38, 000	31, 300	20, 000	36
37	22	54, 800	46, 000	37, 800	24, 100	37
38	24	65, 200	54, 800	45, 000	28, 700	38