FM 3-19.1 (FM 19-1)

Military Police Operations

Headquarters, Department of the Army

DISTRIBUTION RESTRICTION: Approved for public release; distribution is unlimited.

FM 3-19.1 (FM 19-1)
22 MARCH 2001

By Order of the Secretary of the Army:

ERIC K. SHINSEKI
General, United States Army
Chief of Staff

Official:

JOEL B. HUDSON
Administrative Assistant to the
Secretary of the Army
0103705

DISTRIBUTION:

Active Army, Army National Guard, and US Army Reserve: To be distributed in accordance with the initial distribution number 111046, requirements for FM 3-19.1

***FM 3-19.1** (FM 19-1)

Field Manual
No. 3-19.1

Headquarters
Department of the Army
Washington, DC, 22 March 2001

Military Police Operations

Contents

		Page
	PREFACE	iv
Chapter 1	**INTRODUCTION**	1-1
	Overview	1-1
	Operational Framework	1-3
	Battlefield Organization	1-4
	Types of Military Police Units	1-7
	Joint, Multinational, and Interagency Operations	1-7
Chapter 2	**BATTLE COMMAND**	2-1
	Overview	2-1
	Battlefield Visualization	2-1
	Commander's Intent	2-2
	Concept of Operations	2-2
	Command and Control Relationships	2-2
	Support Relationships	2-3
	Staff Relationships	2-3
Chapter 3	**THE THREAT**	3-1
	Overview	3-1
	Rear-Area and Sustainment Operations	3-1
	Reception, Staging, Onward Movement, and Integration Operations	3-2
	Threat Levels	3-3
	Threat Priorities	3-4
	Threat Location	3-5
	Countering the Threat	3-7
Chapter 4	**MILITARY POLICE FUNCTIONS**	4-1
	Overview	4-1
	Maneuver and Mobility Support	4-2
	Area Security	4-6
	Internment and Resettlement	4-9
	Law and Order	4-10
	Police Intelligence Operations	4-13

Distribution Restriction: Approved for public release; distribution is unlimited.

*This publication supersedes FM 19-1, 23 May 1988.

Page

Chapter 5 **MILITARY POLICE SUPPORT TO ECHELONS ABOVE CORPS** 5-1
Overview 5-1
Military Police Support 5-2

Chapter 6 **MILITARY POLICE SUPPORT TO CORPS** 6-1
Overview 6-1
The Military Police Brigade (Combat Support) 6-1
Command and Control 6-3
Employment 6-3

Chapter 7 **MILITARY POLICE SUPPORT TO DIVISION** 7-1
Overview 7-1
Division Military Police Company 7-2
Command and Control 7-2
Military Police Employment 7-3

Chapter 8 **SEPARATE BRIGADES AND INITIAL/INTERIM BRIGADE COMBAT TEAMS** ... 8-1
Overview 8-1
Support to Separate Brigades 8-1
Support to the Initial/Interim Brigade Combat Team 8-2

Chapter 9 **THE UNITED STATES ARMY CRIMINAL INVESTIGATION COMMAND** 9-1
Overview 9-1
Command and Control 9-2
Wartime Support 9-2
Organization 9-4
Employment 9-8

Chapter 10 **OFFENSIVE AND DEFENSIVE OPERATIONS** 10-1
Overview 10-1
Support to Offensive Operations 10-1
Support to Defensive Operations 10-3

Chapter 11 **STABILITY AND SUPPORT OPERATIONS** 11-1
Overview 11-1
Force Suitability 11-2
Stability and Support 11-3
Organizations and Capabilities 11-14

Chapter 12 **FORCE PROTECTION** 12-1
Overview 12-1
Support to Force Protection 12-1

Appendix A **METRIC CONVERSION CHART** A-1

Appendix B **DOCTRINE AND TRAINING LITERATURE** B-1
Doctrine B-1
Tactics B-2
Techniques B-2
Procedures B-2

Page

Appendix C BATTLEFIELD WORKLOAD ANALYSIS C-1

Appendix D AUTOMATED INFORMATION SYSTEMS IN SUPPORT OF BATTLE COMMAND D-1
Army Information Systems D-1
Military Police Automated Systems D-4

Appendix E POLICE INFORMATION ASSESSMENT PROCESS E-1
Implementation E-1
Sample Scenario E-6

Glossary Glossary-1

Bibliography Bibliography-1

Index Index-1

Preface

The Military Police (MP) Corps supports the commander across the full spectrum of military operations. This manual is the foundation for all MP doctrine as it relates to this support. It communicates to all levels of leadership and staffs how the MP provide a flexible and lethal force capable of operating across this full spectrum. As the keystone manual, it identifies what the MP train on and how their forces are organized and equipped in support of all Army echelons. Additionally, this manual provides guidance that can be used by United States (US) Army service schools, students, sister services, and federal agencies.

This manual is based on the purpose, organization, responsibilities, and goals of the US Army as set forth in Field Manuals (FMs) 100-1 and 3-0, as well as corps, division, and brigade manuals. Additionally, this manual is fully compatible with current joint, multinational, and interagency doctrine.

Appendix A contains a metric conversion chart.

The proponent of this publication is HQ TRADOC. Send comments and recommendations on Department of the Army (DA) Form 2028 directly to Commandant, US Army Military Police School (USAMPS), ATTN: ATSJ-MP-TD, 401 Engineer Loop, Suite 2060, Fort Leonard Wood, Missouri 65473-8926.

Unless this publication states otherwise, masculine nouns or pronouns do not refer exclusively to men.

Chapter 1

Introduction

The MP Corps has a strong history evolving over the past five decades. We, as a corps, continue to transform our organizations and doctrine as we have in the past to support the Army in the active defense of the 1970s, the AirLand battle of the 1980s, and now the force-projection doctrine of the 1990s. Our five MP functions clearly articulate the diverse role the MP play across the full spectrum of military operations. We cannot bask in our successes, nor reflect or celebrate. Our charter is to continue our legacy of stellar performance and strive to perfect it.

BG Donald J. Ryder

When the Army developed the Active Defense strategy in 1976, the US was facing the Cold War scenario of central Europe. Military strategy and doctrine were related to a single, focused threat that revolved around the countries in the Warsaw Pact. We were an outnumbered and technically inferior force facing an armor-dominated European battlefield. The MP Corps supported the Active Defense strategy by tailoring its forces to meet the threat. In 1982, when the AirLand Battle strategy was developed, US forces were still outnumbered, but were no longer technically inferior. Still threat-based and focused on a central European conflict, the AirLand Battle strategy used a relatively fixed framework suited to the echeloned attack of soviet-style forces. It delineated and clarified the levels of war; emphasized closed, concerted operations of airpower and ground forces; balanced the offense and the defense; and highlighted the synchronization of close, deep, and rear operations. MP doctrine kept pace with the Army's AirLand Battle strategy by supporting the battlefield commander through four basic missions—battlefield circulation and control, area security (AS), enemy prisoner of war (EPW), and law and order (L&O).

OVERVIEW

1-1. In October 1983, MP capabilities in the AirLand Battle strategy were tested during operation Urgent Fury in Grenada. The MP performed missions that ranged from assisting the infantry in building-clearance operations to assisting Caribbean peacekeeping forces in restoring L&O. These actions secured the MP's place in the combat-support (CS) role, demonstrating the professional knowledge and flexibility necessary for rapid transition from combat to CS to peacetime missions. The changing battlefield conditions of operation Urgent Fury set the stage for the demand of MP units today.

1-2. Evolving simultaneously with the changing definition of the modern battlefield, MP performance in Operations Hawkeye, Just Cause, and Desert Shield/Storm galvanized their ability to perform at any point along the operational continuum. With the publication of FM 100-5 in 1993, the Army adopted the doctrine of full-dimensional operations, relying on the art of battle command to apply those principles and to shift the focus from AirLand Battle to force-projection doctrine. This new doctrine was based on recent combat experience in a multipolar world with new technological advances. Already trained and expected to perform in this new strategy, MP support was already in place and fully operational. The MP continued to perform their basic battlefield missions and to refine their capabilities while supporting the battlefield commander as he deployed to contingency operations throughout the world.

1-3. In 1996, the MP Corps went through a doctrinal review process to determine if it was properly articulating its multiple performance capabilities in support of US forces deployed worldwide (see Appendix B). The review process identified the need to restructure and expand the EPW mission to include handling US military prisoners and all dislocated civilians. This new emphasis transformed the EPW mission into the internment and resettlement (I/R) function. The review process also identified the need to shift from missions to functions. In the past, the four battlefield missions adequately described MP capabilities in a mature theater against a predictable, echeloned threat. However, that landscape is no longer valid. Accordingly, the four MP battlefield missions have become the following five MP functions:

- Maneuver and mobility support (MMS).
- AS.
- L&O.
- I/R.
- Police intelligence operations (PIO).

1-4. These new MP functions are shaped by the following factors:

- The application of stability and support operations where the integration of joint, multinational, and interagency capabilities are common occurrence.
- The lack of traditional linear battlefields, requiring theater commanders in chief (CINCs) to request forces that meet a specific function to accomplish operational requirements.
- The impact of asymmetric threats (such as drug traffickers and terrorist factions) and the effects of man-made and natural disasters.
- The impact of advances in information and communication technologies and specifically in understanding the increased vulnerabilities presented by these technologies.

1-5. Articulating MP capabilities along functional lines benefits the MP and the Army echelon commander as well as the combatant commander. Since there is a multinational, interagency, and sister-service overlap of security services, the importance of including MP leaders and staffs early in the operational planning process cannot be overemphasized. This means before units are designated, unit boundaries are drawn, and unit missions are assigned. Early involvement ensures the proper development of common

security responsibilities, communication and connectivity, liaisons, processes, and the rules of interaction between all forces. The ultimate goal should be the optimal, phased employment of MP forces in support of a commander's operational plan. MP functions not only reflect and capture current capabilities, they define the MP Corps in the twenty-first century.

1-6. As the Army reshapes and focuses its resources on transformation, Force XXI, and other redesign efforts, the MP Corps stands proud and ready to support this progress and reiterate its commitment to assist, protect, and defend.

OPERATIONAL FRAMEWORK

1-7. The operational framework consists of the arrangement of friendly forces and resources in time, space, and purpose with respect to each other, the enemy, or the situation (see Figure 1-1). The operational framework for Army forces (ARFOR) rests within the combatant commander's theater organization. Each combatant commander has an assigned geographical area of responsibility (AOR), also called a theater, within which he has the authority to plan and conduct operations. Within the theater, joint-force commanders at all levels may establish subordinate operational areas such as areas of operation (AOs), joint-operations areas (JOAs) and joint rear areas

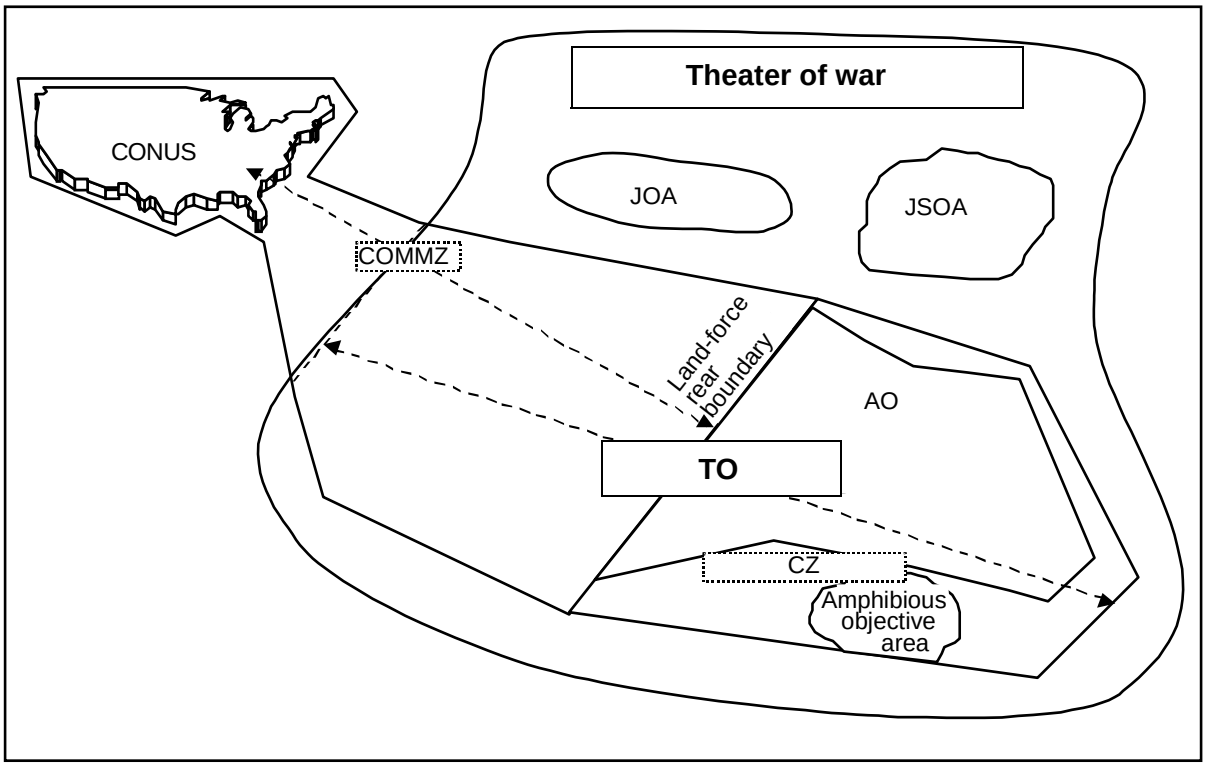

Figure 1-1. Operational Framework

(JRAs). The JRAs facilitate the protection and operation of bases, installations, and forces that support combat operations. When warranted, combatant commanders may designate theaters of war, theaters of operations (TOs), combat zones (CZs), and communications zones (COMMZs).

1-8. A theater of war is that area of air, land, or water that is, or may become, directly involved in the conduct of the war. A theater of war may contain more than one TO. It does not normally encompass the geographic combatant commander's entire AOR. A TO is a subarea (defined by a geographic combatant commander) within a theater of war in which specific combat operations are conducted or supported.

1-9. A CZ is the area required by combat forces for conducting operations. It normally extends forward from the land force's rear boundary. The COMMZ is the rear part of the TO (behind but contiguous to the CZ) that contains the lines of communication (LOC) and provides supply and evacuation support. Other agencies required for the immediate support and maintenance of field forces may also be located in the COMMZ. The COMMZ spans back to the continental US (CONUS) base, to a supporting combatant commander's AOR, or both.

1-10. An AO is an operational area defined by the joint-force commander for land and naval forces. An AO does not typically encompass the entire operational area of the joint-force command (JFC), but it should be large enough for component commanders to accomplish their mission and protect their forces. Army commanders use control measures to describe AOs and to design them to fit the situation and take advantage of the joint force's capabilities. Commanders typically subdivide the assigned AO by assigning subordinate-unit areas. These subordinate-unit areas may be contiguous or noncontiguous (see Figure 1-2). When friendly forces are contiguous, a boundary separates them. When friendly forces are noncontiguous, the concept of operations links the force's elements, but the AOs do not share a boundary. The intervening area between noncontiguous AOs remains the responsibility of the higher headquarters.

BATTLEFIELD ORGANIZATION

1-11. Battlefield organization is the arrangement of forces according to purpose, time, and space to accomplish a mission. Battlefield organization has both a purpose- and spatial-based framework. The purpose-based framework centers on decisive, shaping, and sustaining (DSS) operations. Purpose unifies all elements of the battlefield organization by providing the common focus for all actions. However, forces act in time and space to accomplish a purpose. The spatial-based framework includes close, deep, and rear areas. Despite the increasing nonlinear nature of operations, there may be situations where commanders describe DSS operations in spatial terms. Typically, linear operations involve conventional combat and concentrated maneuver forces. Ground forces share boundaries and orient against a similarly organized enemy force. In such situations, commanders direct and focus simultaneous DSS operations in deep, close, and rear areas, respectively (see FM 3-0).

1-12. The MP battlefield organization supports every Army echelon, from the Army service component command (ASCC) and the theater-support command

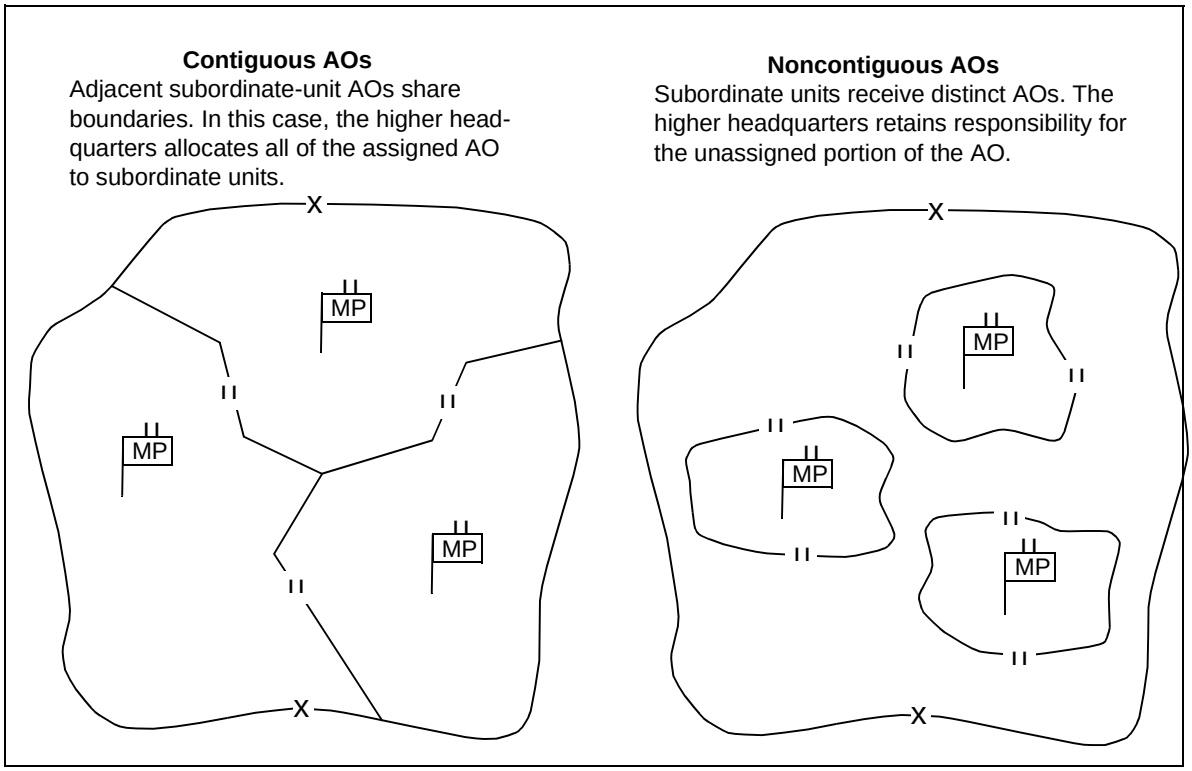

Figure 1-2. Contiguous and Noncontiguous AOs

(TSC) to the maneuver brigade. Regardless of the battlefield organization (purpose or spatial based), MP support to the Army commander is based on available resources and mission, enemy, terrain, troops, time available, and civilian considerations (METT-TC).

1-13. MP support throughout the theater of war may include MP units in the JOA and in the TO. If the combatant commander designates a COMMZ and a CZ within his TO, MP support will come from the established MP modified table of organization and equipment (MTOE) at the subordinate-command echelon. MP support to the JOA is also provided based on METT-TC and available MP assets. Typical MP support may include an I/R brigade liaison detachment (BLD), MP brigades and battalions, a division MP company, a military-working-dog (MWD) team, an L&O team, and a customs team. Figure 1-3, page 1-6, depicts a typical MP organization throughout the TO. In the COMMZ, Figure 1-3 depicts the different types of MP units that are assigned to echelons above corps (EAC) (the ASCC or the TSC). In the CZ, Figure 1-3 depicts the different types of MP units that are assigned to corps, division, and the separate brigades.

SUPPORT IN THE COMMZ

1-14. MP support in the COMMZ is provided by an array of multifunctional MP units. The following MP units provide MP support to EAC:

- The MP brigade (I/R). The MP brigade (I/R) may augment the ASCC or the TSC during wartime. Its mission is to provide command, staff

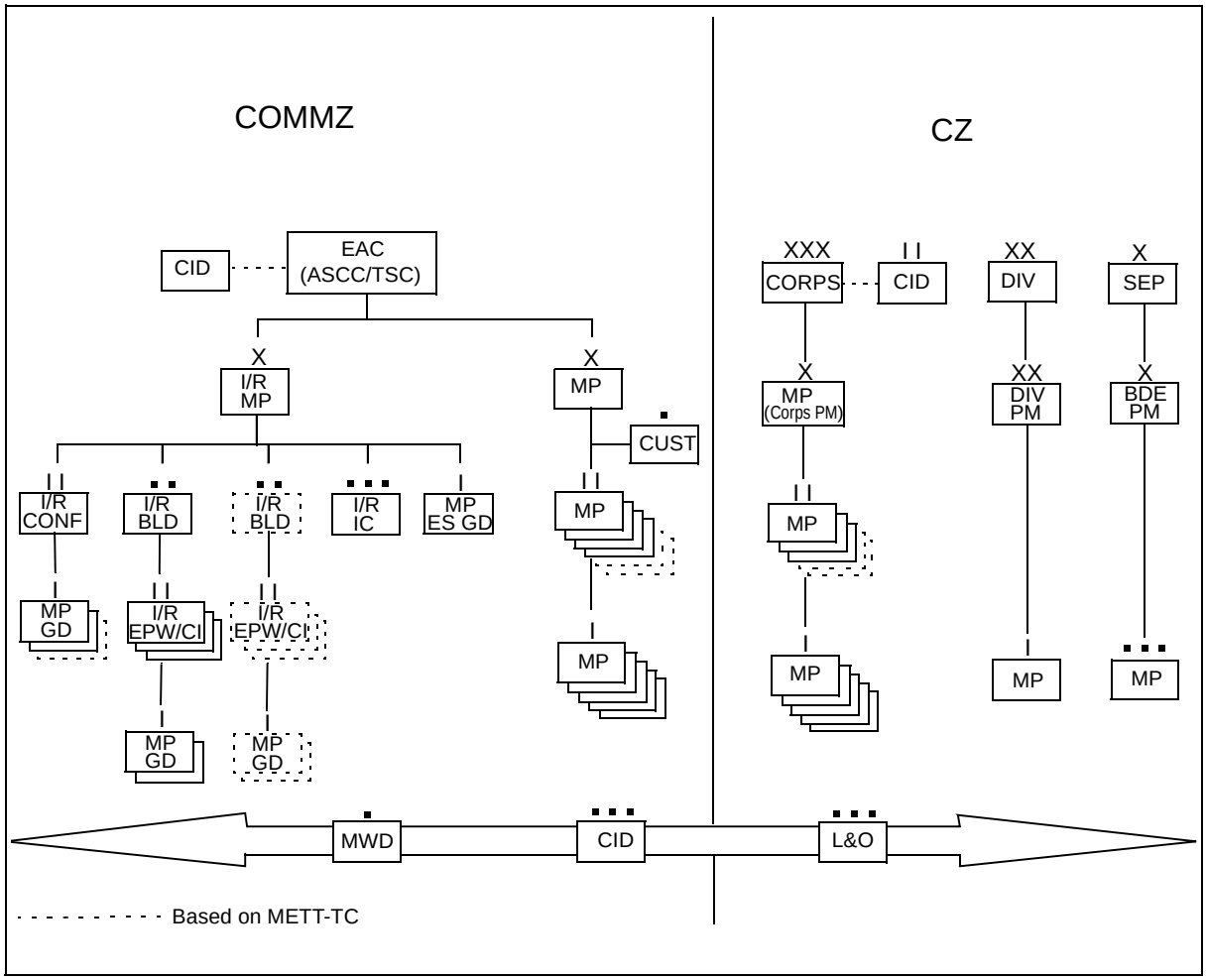

Figure 1-3. MP Structure in the TO

planning, and supervision of I/R operations. This includes coordination with joint and host-nation (HN) agencies, civilian police authority, nongovernmental organizations (NGOs), and US federal agencies.

- The MP brigade (CS). The MP brigade (CS) is assigned to the ASCC or the TSC during wartime (based on METT-TC). The MP brigade (CS) is capable of performing all five MP functions.
- The Criminal Investigation Division (CID) group. The CID group is a stovepipe organization that reports directly to the Commander, US Army Criminal Investigation Command (USACIDC). The CID group provides support to the ASCC and subordinate commands (TSC, corps, or division). See Chapter 9 for further discussion of CID support.

1-15. MP support to other EAC subordinate commands is performed only if MP resources are available. See Chapter 5 for further discussion of MP support to EAC.

SUPPORT IN THE CZ

1-16. MP support is provided in the CZ to each corps, division, and brigade (separate teams or initial/interim brigade combat teams [IBCTs]). An MP brigade (CS) is assigned to each corps, and the MP brigade commander is the corps's provost marshal (PM). A PM and his section, along with an organic division MP company, are assigned to each division. A PM cell and an MP platoon are organic to a separate brigade. A two-person PM cell is organic to the IBCT. The MP units assigned to corps, divisions, and separate brigades are capable of performing all five MP functions. They provide combat, CS, and combat-service-support (CSS) operations within their command's AO.

TYPES OF MILITARY POLICE UNITS

1-17. Most MP units supporting a TO and a JOA are capable of performing all five MP functions. However, the functions must be prioritized based on METT-TC and the availability of MP assets. Current MP structures are designed and tailored to better support the level of command deployed. For example, at the division level, division MP companies are organized as light, heavy, airborne, or air assault and are organic to their respective divisions. The EAC and corps MP brigades and battalions are equally designed to command and control a force mix of up to six battalions or companies. An MP escort-guard and guard company are designed to transport, guard, and provide security to EPWs, civilian internees (CIs), or dislocated civilians. The MP escort-guard company is assigned to the MP brigade (I/R), and the MP guard company is assigned to the MP battalion (I/R).

1-18. MP units can also be tailored and augmented to accomplish multiple, diverse, or specific missions. Customs, L&O, and MWD teams are examples of MP capabilities and flexible responses to a combatant commander's operational requirements. (See FM 19-10 and Army Regulation (AR) 190-12 for further information.) The battlefield workload analysis (BWA) is a tool used to determine the number of MP units required to perform some of these multiple missions (see Appendix C).

JOINT, MULTINATIONAL, AND INTERAGENCY OPERATIONS

1-19. In today's environment, the Army will rarely operate or fight alone. The high probability that the Army will operate in concert with its sister services, in an alliance with the forces of foreign nations, or in support of United Nations (UN) operations (when it is committed) is fully reflected in joint doctrine. In such operations, protecting LOC, key facilities, and command and control (C^2) centers will be a shared responsibility. Under this framework, MP units can expect to share the AO with joint, combined, multinational, or interagency resources. MP forces must be prepared to conduct a number of full-spectrum operations with a variety of government and nongovernmental agencies, other services, allied nations, and international agencies.

1-20. Corps and division commanders and staffs must plan (in advance) the transition from a single-service headquarters with joint representation to a joint headquarters capable of functioning as a joint task force (JTF) headquarters. When tasked to form a JTF headquarters, the corps or division

must ensure that all of the staff sections and agencies have joint representation (see FMs 100-15 and 71-100). To this end, MP planners must ensure that the JTF is augmented with the appropriate MP forces and with the appropriate echeloned C^2.

1-21. Regardless of the force mix, the MP provide the force with unparalleled, multifunctional capabilities. Among these capabilities is the MP's ability to generate firepower or to handle populations such as EPWs/CIs, dislocated civilians, and refugees. Additionally, MP expertise in investigations and law enforcement enhances the capabilities of other joint, multinational, and interagency police and security forces.

1-22. MP security plans must reflect the joint synergy derived from combining the multiple and diverse capabilities of all participants. To capitalize upon that synergy, MP leaders must keep an open line of communication and coordination to offset the challenges presented by interoperability. Some of these interoperability challenges include—

- Differing political objectives.
- Differing capabilities.
- Cultural/language differences.
- Legal and policy constraints.
- Media impacts.
- Compromise of sensitive processes, procedures, and equipment.
- C^2.
- Communications (digital- and analog-equipment differences).

1-23. MP plans must also accommodate differences in planning capabilities, as well as differences in doctrine, training, and equipment. The intent is to match security missions with force capabilities. MP leaders must understand that operations will often involve multinational teams. While US forces routinely task-organize, this may be more difficult to accomplish with some multinational security forces. This kind of orchestration requires employing standardized procedures, communications, equipment, and liaison within the constraints of operations security (OPSEC).

1-24. Coordination is the key to mission accomplishment in multinational and interagency operations. A military coordination center or a civil-military operations center (CMOC) may meet this coordination requirement. The CMOC provides access for nonmilitary agencies desiring military (to include MP/CID) assistance and coordination. These nonmilitary agencies may include—

- Government organizations (GOs).
- NGOs.
- International organizations (IOs).
- International humanitarian organizations (IHOs).
- HN authorities and agencies.

1-25. The introduction of US Army MP forces in any joint, multinational, or interagency operation is based on METT-TC and the capabilities they bring to the operation. Effective integration of MP forces with other security forces reduces redundant functions, clarifies responsibilities, and conserves resources.

Chapter 2

Battle Command

Command is the authority a commander in military service lawfully exercises over subordinates by virtue of rank and assignment. Leaders possessing command authority strive to use it with firmness, care, and skill.

FM 101-5-1

Battle command is the exercise of command in an operation against a hostile, thinking opponent. Battle command includes visualizing the current state and the desired end state, then formulating concepts of operations to get from one state to the other at the least cost. In addition to visualizing and formulating concepts, battle command encompasses assigning missions; prioritizing and allocating resources; selecting the critical time and place to act; and knowing how and when to make adjustments in the fight. Battle command enables MP commanders to lead, prioritize, and allocate assets required in support of the Army commander. MP commanders must observe, orient, decide, and act on their decisions quickly. Information is the key element in the battle-command process; therefore, the commander must have accurate and timely information upon which to base his decisions.

OVERVIEW

2-1. The battle command of MP units is typically decentralized due to the nature of their CS functions, METT-TC, and the needs of the Army commander. This places the burden of sound, timely decision making to the lowest levels. MP leaders must develop a keen sense of situational awareness and visualization, and they must constantly track the actions of supported units.

BATTLEFIELD VISUALIZATION

2-2. The ability to visualize the battlefield is a critical element of battle command. Battlefield visualization is an essential leadership attribute and is critical to accomplishing the mission. It is learned and attained through training, practice, experience, technical and tactical knowledge, and available battle-command technologies. It results when the MP commander understands the higher commander's intent, his assigned mission, the enemy, and the friendly force's capabilities and limitations. See Appendix D for further information on command technologies.

2-3. Battlefield visualization includes the MP commander's view of what his forces will do and the resources needed to do the mission. He envisions a sequence of actions that will cause his MP forces to perform at the desired end state. Ultimately, the MP commander's battlefield vision evolves into his intent and helps him develop his concept of operations.

COMMANDER'S INTENT

2-4. The commander's intent is a key part of Army orders. It is a clear, concise statement of what the force must do to succeed with respect to the enemy, the terrain, and the desired end state. It provides the link between the mission and the concept of operations by stating key tasks. These tasks, along with the mission, are the basis for subordinates to exercise initiative when unanticipated opportunities arise or when the original concept of operations no longer applies. MP leaders at all echelons must ensure that the mission and the commander's intent are understood two echelons down (see FM 101-5).

CONCEPT OF OPERATIONS

2-5. The commander's intent does not include the method by which the MP units will accomplish the mission. This method is called the commander's concept of operations. It must—

- Convey the commander's vision of how to accomplish the mission in a manner that allows his subordinates maximum initiative.
- Build around intelligence gathering and the precise employment of MP resources.
- Provide the basis for task organization, scheme of maneuver, terrain organization, tasks to subordinates, and synchronization.

COMMAND AND CONTROL RELATIONSHIPS

2-6. MP units are assigned to, attached to, or placed under the operational control (OPCON) of MP or other units they support. OPCON is the authority to perform command functions over subordinate forces. This includes organizing and employing commands and forces, assigning tasks, designing objectives, and giving authoritative direction necessary to accomplish the mission. MP C^2 relationships may be changed briefly to provide better support for a specific operation or to meet the needs of the supported commander. MP units may be placed under the OPCON of another unit commander for short-term operations. The MP unit remains in this relationship only as long as it is needed for that operation.

MP support to the Bosnian municipal elections consisted of one division and two corps MP companies. These MP assets, attached to Task Force (TF) Eagle, were task-organized from different sources. The division MP company and the PM cell were organic to TF Eagle's mechanized infantry division headquarters, but the two corps MP units were from US Army Forces Command (FORSCOM) MP battalions in CONUS.

SUPPORT RELATIONSHIPS

2-7. MP units on the battlefield provide two types of support—general support (GS) and direct support (DS). Corps and EAC MP units provide GS to their respective corps/EAC subordinate commands. Light, airborne, and air-assault MP companies provide GS to their respective divisions. Heavy-division MP companies provide GS to the division rear and DS to the division's subordinate brigades.

STAFF RELATIONSHIPS

2-8. The PM for each level of command is that command's advisor on MP combat, CS, and CSS operations. The PM—

- Advises the commander and staff about MP abilities/capabilities.
- Supervises the preparation of plans and dictates policies.
- Coordinates MP operations.
- Assists and supervises the interaction of supporting and supported units.
- Reviews current MP operations.
- Coordinates with allied forces and HN military and civil police.
- Ensures that MP plans and operations supporting the commander's tactical plan are carried out.
- Recommends when and where to concentrate the command's MP assets.
- Supervises or monitors MP support in the command's AO.

2-9. The PM works daily with the commander and staff officers who employ MP resources and whose AORs influence MP support. The PM works closely with the coordinating staff at the appropriate command level to coordinate MP support. He ensures that MP planning is practical and flexible, that plans are coordinated with staff sections and subordinate commands, and that plans reflect manpower and resources needed by MP. (This includes the need for C^2, fire support, equipment, and supplies. It also includes construction, communication, transportation, and aviation support.) As new information is received, the PM reviews, updates, and modifies the plans. He ensures that the echelon commander gets the necessary MP support.

2-10. In the absence of specific directions or orders, the PM plans the use of MP assets. He evaluates the current operations and projects the future courses of action (COAs). He bases his plans on assumptions consistent with the commander's intent and a thorough knowledge of the situation and mission. The PM considers—

- METT-TC.
- Current estimates developed by the intelligence preparation of the battlefield (IPB) and the police information assessment process (PIAP).
- The environment within the AO. This includes the climate, the terrain, and obstacles. It also includes the legal authority and status of the force; the width, depth, size, and location of built-up areas; and the attitudes and abilities of the local populace.

- The types of units operating in the area (to include joint, combined, multinational, and interagency units) and the missions and capabilities of these units. This knowledge is imperative to understand their capability to counter threats in their area.
- The specific missions of MP units in the area and the impact that rear-area security operations will have on the ability of these units to perform other functions.
- Personnel, vehicles, and equipment in the MP units.

2-11. Coordination and communication between the PM and Army commanders is essential. Such actions ensure timely and efficient MP support to all levels of command during any operation. The informal, technical chain of coordination is an open line of communication between PMs at different echelons. The informal chain of coordination fosters cooperation and help among the MP elements at each echelon. For instance, when the division PM needs more assets to accomplish added missions, he initiates coordination with the corps PM. If the corps PM can provide support, the division PM formalizes his request for assistance through the division Assistant Chief of Staff, G3 (Operations and Plans) (G3).

Chapter 3

The Threat

In the 40-odd years of the Cold War, in many locations around the world, the Army performed a deterrent role as part of the containment strategy. In other places, at other times, the Army fulfilled the Nation's expectation in operations too small to be called "wars," although no less dangerous. To the soldier on the ground, Operations Urgent Fury in Grenada and Just Cause in Panama were indistinguishable from combat operations of their forefathers. Operations Provide Comfort in Iraq and Restore Hope in Somalia, although peace operations, also proved to be dangerous.

FM 100-1

The end of the Cold War has reduced, but not eliminated, the most immediate threat to the security of the US and other western nations. However, the absence of a dominant, identifiable threat has produced a far more complex and confusing strategic environment than the one that was present during the Cold War. Forward-deployed and CONUS-based ARFOR and civilians are and will continue to be engaged in a range of military actions. These actions stem from deterring conflicts to conducting peacetime engagement operations to providing support to civil agencies at home and abroad.

OVERVIEW

3-1. During the past decade, the US has deployed forces in multiple operations that have included crisis response in combat situations as well as participation in noncombat activities. The Army's presence in South Korea, Saudi Arabia, and Kuwait and its deployments to Somalia, Haiti, Bosnia, and Kosovo are clear indicators that the military must be prepared to face not only the traditional threat, but also a nontraditional, nonecheloned enemy. To support Army commanders successfully, MP leaders must understand the nature and complexity of these threats and how they can potentially affect the desired strategic, operational, and tactical end states.

REAR-AREA AND SUSTAINMENT OPERATIONS

3-2. The rear area for any particular command is the area extending forward from its rear boundary to the rear of the area assigned to the next lower level of command. This area is provided primarily for the performance of support functions. Operations in the rear area assure freedom of action and continuity of operations, sustainment, and C^2. Sustainment operations are those that enable shaping and decisive operations by assuring freedom of action and

continuity of operations, CSS, and C^2 (see FM 3-0). Sustainment operations include the following elements:

- CSS.
- Rear-area and base security.
- Movement control.
- Terrain management.
- Infrastructure development.

3-3. During the Cold War, the danger to rear areas included forces that would be deployed in support of major soviet-style operations. The adversaries using the soviet model could be expected to engage in intense combat activity in their enemy's rear area. Their forces were prepared to penetrate into the enemy's rear and to attack and destroy its reserve forces and rear-area installations. To protect the rear areas, the MP were among the first mobile fighting forces available to the battlefield commander and thus, a source of combat power. Today, the Army commander uses the MP's flexibility and their modular-force training, adaptability, and mobility to serve as a combat multiplier throughout his entire AO. During sustainment operations, the MP perform all functions to ensure freedom of maneuver in support of the overall operational effort.

3-4. Failure to protect our forces during sustainment operations normally results in failure of the entire operation. Sustainment operations determine how fast ARFOR reconstitute and how far they can exploit success. The likelihood of MP units encountering the enemy and engaging in direct combat (not only in the rear area, but also during sustainment operations) cannot be underestimated.

3-5. Threats to rear-area and sustainment operations exist throughout the full spectrum of military operations. These threats may be related or independently engaged, but their effects are frequently cumulative. Threats to rear-area and sustainment operations are usually theater-dependent and are not limited to those outlined in this manual. Joint Publication (JP) 3-10 further discusses the threat in the rear area. Although JP 3-10 defines the threat in the context of a JRA, MP leaders can expect the same level of activity anywhere that US forces are deployed.

RECEPTION, STAGING, ONWARD MOVEMENT, AND INTEGRATION OPERATIONS

3-6. Reception, staging, onward movement, and integration (RSOI) operations consist of essential and interrelated processes in the AO that transform arriving personnel and materiel into forces capable of meeting operational requirements. During RSOI operations, the threat encountered will depend mostly on the type of entry, the nature of the operation, and the enemy. During major contingencies, forces deploy from power-projection platforms within the US or forward bases. The PM must plan MP support during the initial stages of the deployment to ensure the protection of follow-on forces and the detection of potential threats (see FM 100-17-3).

3-7. MP support to RSOI operations includes, but is not limited to—

- Conducting AS operations to counter or prevent enemy actions against marshalling and staging areas.
- Conducting convoy, airport, and rail security operations.
- Conducting populace- and resource-control operations.
- Conducting other physical-security and force-protection measures.
- Conducting other MP functions (as determined by the PM).

THREAT LEVELS

3-8. The threat is divided into three levels. These levels provide a general description and categorization of threat activities, identify the defense requirements to counter them, and establish a common reference for planning guidelines. MP leaders must understand that this does not imply that threat activities will occur in a specific sequence or that there is a necessary interrelationship between each level.

LEVEL I

3-9. Level I threats include the following types of individuals or activities:

- **Enemy-controlled agents.** Enemy-controlled agents are a potential threat throughout the rear area. Their primary missions include espionage, sabotage, subversion, and criminal activities. Their activities span the range of military operations and may increase during both war and military operations other than war (MOOTW). These activities may include assassinating or kidnapping key military or civilian personnel or guiding special-purpose individuals or teams to targets in the rear area.
- **Enemy sympathizers.** Civilians sympathetic to the enemy may become significant threats to US and multinational operations. They may be the most difficult to neutralize because they are normally not part of an established enemy-agent network, and their actions will be random and unpredictable. During war and MOOTW, indigenous groups sympathetic to the enemy or those simply opposed to the US can be expected to provide assistance, information, and shelter to guerrilla and enemy unconventional or special-purpose forces operating in the rear area.
- **Terrorism.** Terrorists are among the most difficult threats to neutralize and destroy. Their actions span the full spectrum of military operations.
- **Civil disturbances.** Civil disturbances, such as demonstrations and riots, may pose a direct or indirect threat to military operations. Although this threat may not be of great impact during war, it may significantly change and affect MOOTW.

LEVEL II

3-10. Level II threats include the following types of forces:

- **Guerilla forces.** Irregular and predominantly indigenous forces conducting guerrilla warfare can pose a serious threat to military

forces and civilians. They can cause significant disruptions to the orderly conduct of the local government and services.

- **Unconventional forces.** Special-operations forces (SOF) are highly trained in unconventional-warfare techniques. They are normally inserted surreptitiously into the rear area before the onset of an armed conflict. They establish and activate espionage networks, collect intelligence, carry out specific sabotage missions, develop target lists, and conduct damage assessments of targets struck.
- **Small tactical units.** Specially organized reconnaissance elements are capable of conducting raids and ambushes in addition to their primary reconnaissance and intelligence-gathering missions. Small (size or capability), bypassed conventional units, as well as other potential threat forces, are also capable of conducting raids and ambushes to disrupt operations.

LEVEL III

3-11. Level III threats are made up of conventional forces. Potential threat forces are capable of projecting combat power rapidly by land, air, or sea deep into the rear area. Specific examples include airborne, heliborne, and amphibious operations; large, combined-arms, ground-forces operations; and bypassed units and infiltration operations involving large numbers of individuals or small groups infiltrated into the rear area, regrouped at predetermined times and locations, and committed against priority targets. Level III forces may use a combination of the following tactics as a precursor to a full-scale offensive operation:

- **Air or missile attack.** Threat forces may be capable of launching an air or missile attack throughout the rear area. It is often difficult to distinguish quickly between a limited or full-scale attack before impact; therefore, protective measures will normally be based on the maximum threat capability.
- **Nuclear, biological, and chemical (NBC) attack.** Commanders must be aware that NBC munitions may be used in conjunction with air, missile, or other conventional-force attacks. The NBC weapons could also be used at Level I or II by terrorists or unconventional forces in order to accomplish their political or military objectives.

THREAT-LEVEL MATRIX

3-12. Table 3-1 lists the threat levels and their likely appropriate responses. The threat levels listed are based on the type of threat. The table should not be construed as restricting the response options to any particular threat.

THREAT PRIORITIES

3-13. The threat will attempt to perform the following operations against targets in the rear area:

- Detect and identify targets.
- Destroy or neutralize operational weapons-system capabilities.
- Delay or disrupt the timely movement of forces and supplies.

Table 3-1. Threat Levels

Threat Level	Example	Response
I	Agents, saboteurs, sympathizers, and terrorists	Unit, base, and base-cluster self-defense measures
II	Small tactical units, unconventional-warfare forces, guerrillas, and bypassed enemy forces	Self-defense measures and response forces with supporting fires
III	Large tactical-force operations (including airborne, heliborne, amphibious, infiltration, and bypassed enemy forces)	Timely commitment of a TCF

- Weaken the friendly force's C^2 network.
- Disrupt support to combat forces.
- Set the stage for future enemy operations.
- Create panic and confusion throughout the rear area.

3-14. Typical examples of enemy priority targets include the following:

- NBC-weapons storage sites and delivery systems.
- Key command, control, communications, computers, and intelligence (C4I) facilities.
- Air-defense artillery (ADA) sites.
- Airfields and air bases.
- Port facilities.
- Main supply routes (MSRs) and MSR checkpoints.
- Key LOC.
- Reserve assembly areas (AAs).
- Troop barracks.
- Critical civilian and logistics facilities.

THREAT LOCATION

3-15. The fact that the Cold War has ended does not imply that our traditional threat has ended. North Korea and Iraq are constant reminders of this fact. For the near future, Army commanders will fight units with Cold-War-era equipment and tactics. The Army trains and is prepared to fight an enemy capable of interfering with our freedom of maneuver throughout the battlefield. On an extended battlefield with asymmetric threats, the danger to high-value assets (HVAs) (including CSS, C^2, communication nodes, and MSRs) only increases. The idea that the danger to the rear area decreases as you travel farther away from the forward edge of the battle area (FEBA) is not true. Threat intensity does not depend on geographical location; it depends on what operations the enemy believes must be initiated (and to what degree) to achieve its objective in the rear area. Military commanders depend on the MP to delay and defeat threats in their AO with a mobile reaction force.

COMMUNICATIONS ZONE

3-16. The nature of the COMMZ will encourage Level I and II threats to concentrate along the LOC and other areas of military significance. MP units will encounter an enemy that is capable of disrupting operations throughout the COMMZ while employing terrorist activities, enemy-controlled agent activities, enemy sympathizers, and saboteurs. If the enemy is Level III capable, MP leaders must expect infiltrations and air, missile, or NBC attacks as a precursor to a major Level III operation.

CORPS REAR AREA

3-17. The activities in Levels I and II will be similar in composition and density as in the COMMZ, but they will target key corps units, key facilities, and corps sustainment capabilities. The threat activities, especially at smaller unit levels, may even precede hostilities. MP leaders must be alert and prepared to encounter unconventional forces conducting diversionary or sabotage operations and small combat units conducting raids, ambushes, or reconnaissance operations or collecting special warfare intelligence. With the fast tempo of offensive operations, MP leaders must also be alert and prepared to encounter bypassed forces that can disrupt operations in the corps rear area.

DIVISION REAR AREA

3-18. The division rear area (DRA) contains many types of CS and CSS units and conducts many complex operations. As in the COMMZ and the corps rear area, the full spectrum of Level I, II, and III activities may occur in the DRA. The main target will be the division's HVA (including key C^2 facilities; airfields; artillery, aviation, and air-defense assets; LOC; and essential CSS units). The threat may conduct diversionary attacks, sabotages, raids, ambushes, and reconnaissance operations to affect the commander's freedom of maneuver and the continuity of operations. Unlike corps MP, the likelihood of division MP encountering bypassed enemy forces is expected. Failure to delay or defeat these forces will impact division operations.

OTHER TYPES OF THREATS

3-19. As US forces are deployed throughout the world, they will have to face nontraditional, asymmetric threats (other than those listed in Table 3-1, page 3-5) that may be geographically specific. As part of situational awareness, and in coordination with military intelligence (MI) and CID personnel, MP leaders must evaluate and assess the impact of these threats in their AO. A TO is vulnerable to any or a combination of the following threats:

- National or international organized crime.
- Narcotics traffickers.
- Narcotics terrorists.
- Extremist groups.
- Paramilitary groups.
- Ethnic or religious disputes.
- Trade in illegal weapons or strategic materials.

3-20. MP leaders must be aware that other threats exist and that they have the same potential as the Level I and II threats to disrupt operations in rear-area or sustainment operations. In some instances, the above threats' capabilities or the massing of personnel may have the same potential threat as a Level III threat.

COUNTERING THE THREAT

3-21. The disruption of rear-area and sustainment operations directly affects military efforts. Three types of forces may be used to counter the threat in these areas—a base/base-cluster self-defense force, a response force, or a tactical combat force (TCF).

BASE/BASE-CLUSTER SELF-DEFENSE FORCE

3-22. A base cluster is established when the appropriate echelon rear-operations cell or command post (CP) places geographically contiguous or noncontiguous bases under the control of a headquarters. The base cluster becomes the next higher tactical C^2 headquarters of those bases. The rear-operations cell or the rear CP may also establish a base cluster for a corps support group (CSG), an area support group (ASG), or other CSS units operating in the corps or division rear areas.

3-23. US ARFOR have the inherent responsibility to contribute as many forces as possible for base defense and local security for themselves and their facilities, installations, and activities. Each base and base-cluster commander must develop a defense plan to detect, defeat, and minimize the effects of Level I and limited Level II threat attacks on his base or base cluster (including NBC attacks). To maximize the unit's mission accomplishment, defense plans must be flexible and allow for differing degrees of security based on the probability of threat activity. Defense plans are given to MP units operating near the base or base cluster. The base commander most often employs a series of defense measures providing internal and perimeter security. His internal reaction forces use organic weapons to neutralize and defeat most low-level threat activity. Although not fully equipped to engage major conventional or unconventional enemy forces that may confront him, a base commander must deploy his personnel to defend themselves until MP, HN, local police, or combat forces (if available) can respond.

RESPONSE FORCE

3-24. A response force is summoned when the base or base cluster is faced with threat forces that are beyond their self-defense capability. If the MP are the designated response force, they must—

- Coordinate with the supported bases or base-cluster commanders to conduct a joint IPB.
- Review base and base-cluster self-defense plans.
- Exchange signal-operating-instructions (SOI) information.
- Identify MP contingency plans to counter likely enemy activities.
- Integrate ADA, engineer, chemical, field-artillery (FA), Army-aviation, and close-air-support (CAS) fire support into their plans (if available).

3-25. MP units help the base or base cluster return to its primary mission by defeating Level II threats. MP units closely watch likely avenues of enemy approach, possible landing zones (LZs), drop zones (DZs), C^2 facilities, and other key installations. They accomplish this through the MMS, AS, and PIO functions.

3-26. If MP units are not the designated response force, they may become the initial response force for units within their AO. When this occurs, they block, delay or, if possible, destroy enemy elements within their capability. If the attack is by a larger or more capable force, they will maintain contact and continue to develop the situation or delay until the appropriate response force appears or the battlefield commander commits the TCF.

TACTICAL COMBAT FORCE

3-27. When the MP response force encounters or engages threats beyond its ability to defeat, it immediately notifies the higher headquarters. The battlefield commander will then evaluate the situation and commit the TCF to defeat the Level III threat. The TCF is normally a combined-arms organization tailored by the corps or division G3, based on METT-TC. The TCF normally receives fire, aviation, or other support needed to fight and defeat the threat. Once the TCF is identified and before it is committed to battle, it will conduct direct coordination with the MP or other response forces regarding the exchange of reconnaissance information, battle-handoff procedures, and contingency plans for TCF operations. Once the TCF is committed, the MP unit performing as the response force becomes OPCON to the TCF commander.

MP AS THE TCF

3-28. The MP brigade or battalion is capable of conducting TCF missions only when properly augmented. MP augmentation may be in the form of fires, small combat units, aviation assets, or CAS. The specific type of augmentation is METT-TC dependent. Additionally, the MP C^2 headquarters must receive the respective liaison officers to ensure that augmentation forces are synchronized and employed according to their capabilities. The MP commander's situational awareness and battlefield visualization are key elements to TCF operations. Once designated as the TCF, the MP unit commander establishes liaison with the appropriate rear CP to obtain—

- The current rear-area IPB.
- The friendly unit disposition.
- Defense plans.
- Priorities for protection.
- The fire-support plan.

3-29. Based on the above information, the MP commander conducts his own IPB and develops a concept of operations. He then forwards it to the appropriate higher echelon for coordination and approval.

3-30. The MP's ability to employ organic MP assets as part of the TCF is limited by the following factors:

- **MP availability.** Normally, all MP assets available are committed at all times. The specific function and scope that MP units perform during the operation are determined by the Army commander's needs, the intensity of the conflict, and the availability of MP resources. The commander, with advice from the MP leader, must decide which MP operations must be scaled back, delayed, or shifted before the MP unit can be designated as part of the TCF.
- **MP dispersion.** MP units are normally displaced over a large geographical area. Technological capabilities and mobility allow them to operate over great distances. In today's battlefield, a typical MP company employment covers between 1,000 and 1,200 square kilometers and performs numerous missions in support of all five functions. The distance between elements, the reprioritization and movement of other MP units, the difficult terrain, poor roads, and bad weather may slow down the MP's commitment as a TCF.

Chapter 4

Military Police Functions

Military police support the Army commander's mission to win the battle. They help the commander shape the battlefield so that he can conduct decisive operations to destroy enemy forces, large or small, wherever and whenever the Army is sent to war.

MAJ(P) Anthony Cruz

The MP Corps supports shaping and sustainment operations while performing its five basic functions as a flexible, economy-of-force organization. Through these functions, MP units are able to provide the commander with an array of CS operations across the full spectrum of military operations (see Table 4-1).

Table 4-1. MP Functions

	Functions				
	MMS	**AS**	**PIO**	**L&O**	**I/R**
Subtasks	Support to river-crossing and breaching operations and passage of lines Straggler and dislocated-civilian control Route R&S MSR regulation enforcement	Recon operations ADC Base/air-base defense Response-force/ TCF operations Critical site, asset, and HRP security Force protection/ physical security Antiterrorism	IPB support PIAP Active and passive roles Information collection and dissemination Joint, interagency, and multinational coordination	Law enforcement Criminal investigations US Customs operations Related L&O training	EPW/CI handling US military prisoner handling Populace and resource control Dislocated civilians
NOTE: Subtasks not all-inclusive.					

OVERVIEW

4-1. MP assets are limited. Specific functions are performed at any given time and are determined by the supported commander's need, the intensity of the conflict, and the availability of MP resources. The supported commander, through the command's PM, sets the priorities for MP operations.

4-2. The PM (based on METT-TC and the available assets) continuously evaluates the trade-off between the MP support that the commander requires and the MP support that can be provided. To meet the priorities set by the

commander's tactical plan, the PM recommends the allocation and employment of MP assets for MP combat, CS, and CSS operations.

MANEUVER AND MOBILITY SUPPORT

4-3. The MMS function involves numerous measures and actions necessary to support the commander's freedom of movement in his AOR. The MP expedite the forward and lateral movement of combat resources and ensure that commanders get forces, supplies, and equipment when and where they are needed. This is particularly important in the modern battlefield where there is a greater geographical dispersal of forces and lengthened LOC.

4-4. The MP maintain the security and viability of the strategic and tactical LOC to ensure that the commander can deploy and employ his forces. The MP support the commander and help expedite military traffic by operating traffic-control posts (TCPs), defilades, or mobile patrols; erecting route signs on MSRs or alternate supply routes (ASRs); or conducting a reconnaissance for bypassed or additional routes. The MP move all units quickly and smoothly with the least amount of interference possible.

4-5. As part of the MMS function, the MP support river-crossing operations, breaching operations, and a passage of lines. They also provide straggler control, dislocated-civilian control, route reconnaissance and surveillance (R&S), and MSR regulation enforcement.

RIVER-CROSSING OPERATIONS

4-6. US forces conduct river-crossing operations to move a large force across a river obstacle with a minimum loss of momentum. The MP play a vital role by assisting the force commander in crossing the river as quickly and efficiently as possible. The crossing is usually planned and conducted by the headquarters directing the crossing. As such, a division crossing operation is conducted by a corps. Whether a brigade or division is crossing, the division MP company may also cross to provide uninterrupted support to the division. In these instances, there is a total reliance on the corps MP to support the crossing. The same is true for breaching operations and a passage of lines.

4-7. MP support for river-crossing operations reduces the crossing time and promotes the efficient movement of vehicles. It reduces congestion, speeds the crossing, and enables the maneuver commander to continue his momentum toward his primary objective. The MP establishes staging and holding areas and TCPs to control movement to and from these areas (according to the traffic-control plan). The MP may be called on to provide security for crossing forces at the crossing sites. In most cases, the MP TCPs and engineer regulation points (ERPs) are located on both sides of the river to improve communications and coordination between the units.

4-8. MP employment for river crossing is influenced by METT-TC. The number and placement of MP assets supporting a river-crossing operation varies with the size of the crossing force, the direction of the crossing (forward or retrograde), and the degree of enemy resistance expected or encountered.

4-9. The MP operating inside the crossing areas are OPCON to the crossing-area commander for the duration of the operation. The MP operating outside

of the crossing area are under the command of their appropriate echelon commander.

4-10. The main thrust of MP support to river-crossing operations is within the immediate river-crossing site. The MP direct units to their proper locations (such as holding areas and staging areas) and ensure that units move through the area within the time listed on the movement schedule. This is a highly critical aspect of river crossing because the number of crossing sites is limited. MP assets are placed where they can stress MMS operations on MSRs leading into the crossing area.

4-11. The MP also provide AS to allow crossing forces to cross the river without losing momentum or forces. On both near and far sides, the MP are used to recon the crossing unit's flanks and rear to enhance security (see FM 19-4).

BREACHING OPERATIONS

4-12. Breaching operations are conducted to allow forces to maneuver through obstacles. Obstacle breaching is the employment of a combination of tactics and techniques to advance an attacking force to the farside of an obstacle that may be covered by fire. It is perhaps the most difficult combat task a force can encounter. Breaching operations begin when friendly forces detect an obstacle, and they end when the battle handover has occurred between the follow-on forces and a unit conducting the breaching operation (see FM 90-13-1).

4-13. The MP support breaching operations in numerous ways. MP assets are employed based on METT-TC, the available resources, and the commander's priorities. As a minimum, MP support may include, but is not limited to—

- Establishing TCPs along routes leading to or departing from the breaching site.
- Establishing holding areas.
- Establishing TCPs at the breaching site.
- Assisting engineers with temporary route signs.
- Establishing straggler-control operations.
- Conducting AS operations.

4-14. The most critical MP support is provided at the breaching site. The MP provide the commander with a means to control traffic flow to appropriate lanes. When multiple lanes branch off of a single far-recognition marker, the MP assist in directing the formation through various lanes. They also assist in modifying the traffic flow when lanes have been closed for maintenance or expansion. The MP conduct close coordination with the crossing-force commander and the TF commander executing the breaching operation. The MP enable the commander to make last-minute changes in traffic flow, thereby giving him increased flexibility to react to the enemy situation.

PASSAGE OF LINES

4-15. A passage of lines is an operation in which a force moves forward or rearward through another force's combat positions with the intention of moving into or out of contact with the enemy. The passage of lines is a high-

risk military operation that requires close coordination between the passing unit, the stationary unit, and the MP providing the support.

4-16. The MP help reduce confusion and congestion during a passage of lines. They provide security in areas surrounding passage points and passage lanes to ensure that the passing unit has priority for using routes to and through the areas. The headquarters directing the operations sets the route's priority. The MP can support a forward, rearward, or lateral passage of lines. Before the actual operation, the MP in the AO conduct an area or zone reconnaissance to become familiar with the routes to, through, and beyond the area of passage. This enables the MP to extend the commander's C^2 by providing directions at passage points and by guiding the units through the passing lanes. Maintaining unit integrity and reducing incidents of stragglers is vital to maintaining the passing unit's momentum in a forward passage of lines. The MP perform aggressive straggler- and dislocated-civilian-control operations to prevent possible infiltration of the enemy.

4-17. A passage of lines is usually planned and coordinated by the headquarters directing the passage. A division's passage of lines is planned and coordinated by the corps headquarters. The detailed plans are made and coordinated between the divisions involved. Close coordination between the division and corps PMs is essential. An MP unit may be the unit involved in passing through the lines of another unit. When conducting a delay of a Level II threat, the MP are likely to conduct a passage of lines with the TCF. To avoid fratricide, close coordination between the MP response-force commander and the TCF is imperative (see FM 19-4).

STRAGGLER CONTROL

4-18. Mobile patrols, TCPs, and checkpoint teams return stragglers to military control as part of their operations. Most stragglers are simply persons who become separated from their command by events in the CZ or while moving through the COMMZ. If a straggler is ill, wounded, or in shock, an MP must give him first aid and, if needed, call for medical evacuation (MEDEVAC). If a straggler is uninjured, an MP directs him to his parent unit or to a replacement unit (as command policies dictate). The MP ensure that stragglers attempting to avoid return to their units are escorted back to their command (as a minimum).

4-19. The MP set up special posts for straggler control following NBC attacks or major enemy breakthroughs that result in large numbers of lost, dazed, and confused military personnel. Mobile MP teams operate between posts, and they also direct or collect stragglers. Straggler collection points may be needed if many stragglers are present in a combat theater. If allied forces are present in the theater, each nation establishes a collection point for its own personnel. MP teams are aware of each allied location and are prepared to assist allied soldiers in returning to their respective command. The MP use available transportation assets to transfer stragglers from TCPs and checkpoints to a straggler collection point. At the collection point, they are screened and sorted for removal to a medical facility or returned to their units to reconstitute the tactical commander's combat force.

4-20. The MP report information about stragglers with whom they come in contact. This information is compiled by the MP headquarters and forwarded through appropriate channels to the higher command. Information given by stragglers that is of immediate tactical value is reported without delay.

DISLOCATED-CIVILIAN CONTROL

4-21. The MP expediting traffic on MSRs may encounter dislocated civilians that could hinder military traffic. The MP assist and divert dislocated civilians from MSRs and other areas to I/R facilities. They may also deny the movement of civilians whose location, direction of movement, or actions may be a threat to themselves or to the combat operation. The HN government is responsible for identifying routes for the safe movement of dislocated civilians out of an AO. If needed, the MP assist the civil-affairs unit and the HN in redirecting dislocated civilians to alternate routes established by the HN government.

4-22. The US forces do not assume control of dislocated civilians unless requested to do so by the HN or unless operating in an environment with a hostile government. When the senior US commander assumes responsibility, the MP coordinate with civil affairs to set up TCPs at critical points along the route to direct dislocated civilians to secondary roadways and areas not used by military forces. As required, MWD teams may be used as a show of force or as a deterrent to assist with uncooperative personnel.

ROUTE R&S

4-23. The MP conduct hasty and deliberate route reconnaissances to obtain information on a route and nearby terrain from which the enemy can influence troop movement. A route reconnaissance focuses on continually monitoring the condition of MSRs, ASRs, and other areas. MP patrols look for restricting terrain, effects of weather on the route, damage to the route, NBC contamination, and enemy presence or absence. When enemy activity is spotted, the MP report it, maintain surveillance, and develop the situation. To gather information for proposed traffic plans, they look at the type and number of available routes; and they check load classifications, route widths, obstructions, and restrictions.

MSR REGULATION ENFORCEMENT

4-24. The MP undertake MSR regulation enforcement to keep the routes free for DSS operations. MP units support the command's MSR regulation measures as stated in the traffic-regulation plan (TRP). The TRP contains specific measures to ensure the smooth and efficient use of the road network. It assigns military route numbers and names, the direction of travel, highway regulation points, and preplanned MP TCPs. Most importantly to the MP, it gives the route's control classification. The MP ensure that classified routes are used only by authorized traffic. Vehicles traveling on roads too narrow for their passage or on roads unable to support their weight can obstruct the route.

4-25. To expedite traffic on MSRs, the MP operate special circulation control measures such as—

- Temporary route signing.
- Static posts such as TCPs, roadblocks, checkpoints, holding areas, and defilades at critical points.
- Mobile teams patrolling between static posts and monitoring traffic and road conditions.

4-26. They also gather information on friendly and enemy activities and help stranded vehicles and crews. The MP also place temporary route signs to warn of hazards or to guide drivers unfamiliar with the route. Using these measures, the MP exercise jurisdiction over the road network in the AO and coordinate with the HN (whenever possible) to expedite movement on MSRs.

AREA SECURITY

4-27. The MP perform the AS function to protect the force and to enhance the freedom of units to conduct their assigned missions. The MP who provide AS play a key role in supporting forces in rear-area and sustainment operations. The MP are a response force that delays and defeats enemy attempts to disrupt or demoralize military operations in the AO. The MP's mobility makes it possible for them to detect the threat as they aggressively patrol the AO, MSRs, key terrain, and critical assets. The MP's organic communications enable them to advise the appropriate headquarters, bases, base clusters, and moving units of impending enemy activities. With organic firepower, the MP are capable of engaging in decisive operations against a Level II threat and delaying (shaping) a Level III threat until commitment of the TCF.

4-28. Throughout all aspects of the AS function, the MP perform counteractions to protect the force and to prevent or defeat a Level II threat operating within the MP's AO. MP countermeasures may include implementing vulnerability assessments, developing procedures to detect terrorist actions before they occur, hardening likely targets, and conducting offensive operations to destroy the enemy. The MP use checkpoints and roadblocks to control the movement of vehicles, personnel, and materiel and to prevent illegal actions that may aid the enemy. The use of these control measures serves as a deterrence to terrorist activities, saboteurs, and other threats. However, at the same time, checkpoints and roadblocks expose the MP to these potential threats. To counter this fact, the MP may upgrade or harden vehicles and defensive positions.

4-29. The MP provide combat power to protect the C^2 headquarters, equipment, and services essential for mission success. The MP provide the battlefield commander with a light, mobile fighting force that can move, shoot, and communicate against any threat. Major subtasks associated with the AS function include reconnaissance operations; area damage control (ADC); base/air-base defense; response-force operations; and critical site, asset, and high-risk personnel (HRP) security.

RECONNAISSANCE OPERATIONS

4-30. As part of their AS mission, the MP serve as the eyes and ears of the battlefield commander by seeking out the enemy and reporting information obtained by recon patrols. The MP conduct area and zone reconnaissances,

screening, surveillance, and countersurveillance to gain information to help guard against unexpected enemy attacks in the AO. The MP monitor likely avenues of approach and potential LZs and DZs. They become familiar with towns and other populated areas, ridgelines, woods, and other terrain features from which the enemy can influence movements along road networks. The MP pay close attention to areas near facilities designated critical by the commander. These areas include key MSR bridges and tunnels, depots, terminals, logistics-support bases, ammunition supply points (ASPs), communications centers/nodes, and C^2 headquarters. The MWD teams provide explosive detection and personnel detection/tracking capabilities that enhance reconnaissance operations (especially in urban terrain).

AREA DAMAGE CONTROL

4-31. MP units take measures to support ADC before, during, and after hostile actions or natural and man-made disasters. The ADC actions integrate CS and CSS functions for many units. Engineers, medical personnel, and Army aviators work closely to ensure quick relief operations. The MP provide MSR regulation enforcement, refugee control, and some local security when required. As with reconnaissance operations, the MP may use MWD explosive-and personnel-detection capabilities to augment all MP missions in rear-area and sustainment operations.

BASE/AIR-BASE DEFENSE

4-32. The MP are the base and base-cluster commanders' links for detection, early warning, and employment against enemy attacks. The information gathered is dispersed throughout the rear area to help apprise the commander of enemy activities near bases. Base defense is the cornerstone of rear-area security. When the threat exceeds the base/base-cluster capability, the base/base-cluster commander requests MP assistance through the appropriate C^2 element.

4-33. Air-base defense requires special MP coordination with the US Air Force (USAF). The MP treat air bases like any other base or base cluster. A USAF air base may house the base-cluster commander, or it may be a cluster by itself. The MP are responsible for the air base's external defense. Its internal defense is primarily the responsibility of the Air Force's security forces. The security force provides in-depth defense for weapons, weapons systems, command centers, personnel, and other priority resources established by the base commander.

4-34. The security force is trained and equipped to detect, delay, and deny Level I and II threats. If a Level III threat is present, the security force is tasked with delaying actions; however, the HN, a sister service, or other support must be employed to defeat this threat. If the security force requires assistance to defeat a Level II threat, it may rely on MP response forces or another response force to assist in the defense. If available, the MP response force will react to the air-base defense, just as it would for any other base or base cluster within the MP's AO. However, the key to successful MP employment depends on the critical exchange of information before and during the MP employment. Good communications, an understanding of the

defense plan, and liaison operations are vital in preventing responding forces from entering a situation that could result in fratricide.

RESPONSE-FORCE OPERATIONS

4-35. The MP are the base and base-cluster commanders' response force against enemy attacks in rear-area or sustainment operations. The MP gather information about the enemy while performing missions throughout the AO. This information provides commanders with enemy activity near bases. When needed, the MP provide a mobile response force to respond to bases under attack and to destroy the enemy. A base commander's defense plan is the cornerstone for protecting rear-area and sustainment operations. The base commander is responsible for defeating all Level I threats. When this threat exceeds his capabilities, he requests MP support. The MP located near bases or patrolling or conducting AS operations consolidate their forces, respond as quickly as possible, and conduct combat operations to destroy the enemy. If needed, the MP conduct a battle handover to the TCF.

4-36. MP forces performing as a response force are capable of conducting the following offensive operations:

- A movement to contact.
- A hasty ambush.
- A hasty attack.
- A delay.
- A call for fire.
- A repel attack against critical sites.
- A defense of critical sites.

4-37. To conduct these missions, the MP consolidate into squads or platoons to delay, defeat, or defend against the threat. See FMs 71-3 and 71-100 for more information on battle-handover operations.

CRITICAL SITE, ASSET, AND HRP SECURITY

4-38. The MP perform their AS function across the entire designated AO. When the MP provide security around a critical site or asset, they usually provide a mobile security screen, taking advantage of its weapons and communications platforms. This standoff protection detects and defeats the threat before it can move within direct-fire range of the facilities. The MP may be tasked to provide detail security to key facilities, assets, and personnel.

4-39. The MP provide security to major CPs and other facilities within the AO. Their employment maximizes mobility, lethality, and communications capabilities as a security screen. They may be required to establish local AS measures (such as checkpoints and listening/observation posts) to further protect these facilities. The MP provide internal access-control points to critical facilities, and they act as a response force. When the critical CP relocates, the MP provide in-transit security. Other types of critical site security include ASPs; deep-water ports; petroleum, oil, and lubricants (POL) terminals and pipelines; trains and railways; and air bases.

4-40. The MP may provide convoy security for top-priority units transporting especially critical supplies to combat forces. MP assets should be employed

primarily on aggressive patrolling, route, area, and zone reconnaissance measures that would create a safe and secure environment for all types of vehicular and unit movement.

4-41. The MP and the CID provide protective services to designated key personnel by providing access control to restricted areas within CPs, providing in-transit security, or providing static security measures around the clock. The MP coordinate with the CID when close-in protection of key personnel is needed. The MP and the CID also provide training for personal-protection countermeasures. The MWD teams may be employed to enhance MP and CID detection and protection capabilities.

INTERNMENT AND RESETTLEMENT

4-42. The Army is the Department of Defense's (DOD's) executive agent for all EPW/CI operations. Additionally, the Army is DOD's executive agent for long-term confinement of US military prisoners. Within the Army and through the combatant commander, the MP are tasked with coordinating shelter, protection, accountability, and sustainment for EPWs/CIs. The I/R function addresses MP roles when dealing with EPWs/CIs, dislocated civilians, and US military prisoners.

4-43. The I/R function is of humane as well as tactical importance. In any conflict involving US forces, safe and humane treatment of EPWs/CIs is required by international law. Military actions on the modern battlefield will result in many EPWs/CIs. Entire units of enemy forces, separated and disorganized by the shock of intensive combat, may be captured. This can place a tremendous challenge on tactical forces and can significantly reduce the capturing unit's combat effectiveness. The MP support the battlefield commander by relieving him of the problem of handling EPWs/CIs with combat forces. The MP perform their I/R function of collecting, evacuating, and securing EPWs throughout the AO. In this process, the MP coordinate with MI to collect information that may be used in current or future operations.

4-44. Although the CS MP unit initially handles EPWs/CIs, modular MP (I/R) battalions with assigned MP guard companies and supporting MWD teams are equipped and trained to handle this mission for the long term. A properly configured modular MP (I/R) battalion can support, safeguard, account for, guard, and provide humane treatment for up to 4,000 EPWs/CIs; 8,000 dislocated civilians; or 1,500 US military prisoners.

EPW/CI HANDLING

4-45. The MP are tasked with collecting EPWs/CIs from combat units as far forward as possible. The MP operate collection points and holding areas to temporarily secure EPWs/CIs until they can be evacuated to the next higher echelon's holding area. The MP escort-guard company assigned to the MP brigade (I/R) evacuate the EPWs/CIs from the corps's holding area to the COMMZ's internment facilities. The MP safeguard and maintain accountability, protect, and provide humane treatment for all personnel under their care.

4-46. In a mature TO, MP (I/R) units process EPWs/CIs collected by MP teams and other units in the CZ. MP guard companies assigned to the MP (I/R) units guard EPWs/CIs at designated camps (see FM 19-40).

POPULACE AND RESOURCE CONTROL

4-47. Populace and resource control (PRC) denies adversaries or insurgents access to the general population and resources. The MP supports civil-affairs personnel and the tactical commander in planning and conducting PRC programs employed during all military operations. These programs may consist of curfews, movement restrictions, resettling dislocated civilians, licensing, ration control, regulation enforcement, amnesty programs, inspecting facilities, and guarding humanitarian-assistance distributions. The MP also direct dislocated civilians to resettlement camps where they are cared for while NGOs work to coordinate their relocation.

4-48. The MP's security capability, acceptability, and interface with the populace make them suitable as the primary forces of choice in these operations. The MP I/R units are specifically designed to fill this need (see FM 41-10).

US MILITARY PRISONERS CONFINEMENT

4-49. The MP detain, sustain, protect, and evacuate US military prisoners. Whenever possible, soldiers awaiting trial remain in their units, unless reasonable grounds exist to believe that they will not appear at the trial, the pretrial hearing, or the investigation or that they will engage in serious criminal misconduct. Under either of these two pretrial confinement instances, the commander must also reasonably believe that a less severe form of restraint (such as conditions of liberty, restriction in lieu of apprehension, or apprehension) are inadequate. When these circumstances exist and other legal requirements are met, US military personnel may be placed in pretrial confinement under the MP's direct control. Convicted military prisoners are moved as soon as possible to confinement facilities outside of the AO.

4-50. MP confinement operations parallel (but are separate from) the MP's EPW/CI operations. No member of the US armed forces may be placed in confinement in immediate association with an EPW or other foreign nationals who are not members of the US armed forces. A confinement facility is maintained within the TO only if distance or the lack of transportation requires such a facility. When military prisoners are retained in theater, temporary field detention facilities may be established in the CZ and a field confinement facility in the COMMZ (see FM 19-40 and AR 190-47).

LAW AND ORDER

4-51. The L&O function consists of those measures necessary to enforce laws, directives, and punitive regulations. The MP's L&O function extends the battlefield commander's C^2. The MP, in close coordination with the CID, work to suppress the chance for criminal behavior throughout the AO. By coordinating and maintaining liaison with other DOD, HN, joint, and multinational agencies, the MP at all levels coordinate actions to remove

conditions that may promote crime or that have the potential to affect the combat force. Crime-prevention measures and selective enforcement measures are also performed as part of other functions. For example, the MP investigate traffic accidents and regulate traffic as part of the MMS function. The L&O function includes major areas such as law enforcement, criminal investigations, and support to US Customs operations. The primary units conducting L&O are the L&O detachments, customs teams, and CID units. Both the MWD team and the MP company (CS) also support the L&O function.

LAW ENFORCEMENT

4-52. Law-enforcement operations assist the battlefield commander in preserving his force. The MP dedicate assets to conduct law-enforcement operations based on the commander's needs. Since MP L&O and CID assets may be limited during the initial stages of any operation, the PM depends on the supported commander's development of an effective crime-prevention program and uses established investigative tools (such as inquiries and AR 15-6 investigations) to enforce rules. This will allow the PM to employ limited MP assets to perform other functions. Law-enforcement operations include responding to civil disturbances, conducting raids, investigating traffic accidents, conducting vehicle searches, supporting the commander's force-protection program, and providing support to HN and civil-enforcement agencies. Law enforcement also includes employing special-reaction teams (SRTs), marksman/observer (M/O) teams, and MWD teams.

4-53. The Army conducts counterdrug-support operations that generally fall within several DOD counterdrug-mission categories. The MP support the Army's role rather than directly participating in civil law-enforcement activities (such as searches, seizures, and arrests). When tasked, the MP provide training to law-enforcement agencies in common soldier skills, physical security, and tactical planning and operations. US Code (USC) Title 18, Posse Comitatus Act, Section 1385 prohibits the use of DOD assets to enforce civilian law (federal and state) except in cases and under circumstances expressly authorized by the Constitution or by an act of Congress.

4-54. In multinational operations, the MP may assist with the creation of multinational police units. Circumstances that may support the establishment of these police forces include existing or negotiated terms of international agreements or security-assistance programs, a multinational operational agreement, or appropriate military directives. The MP provide the capability to train foreign MP and/or reconstitute indigenous constabulary forces as part of stability and support operations. The MP can provide the initial mentoring to these forces and provide temporary, emergency law-enforcement capabilities until the foreign military or civilian police forces are functional (see FM 100-8).

CRIMINAL INVESTIGATIONS

4-55. The MP investigate offenses against US forces or property committed by persons subject to military law. Investigations against minor crimes (such as low-value, personal-property thefts or simple assaults) are normally

investigated by the MP's L&O detachment. Investigations against major incidents involving wrongful death, serious bodily injury, and war crimes are referred to special agents of the USACIDC. The USACIDC conducts death investigations in the absence of HN agreements or in conjunction with the HN. The USACIDC special agents are authorized to investigate any alleged criminal conduct in which there is an Army interest unless prohibited by law or higher authority.

4-56. The USACIDC's investigative authority and investigative responsibility outside of the US are determined by international treaty or agreement (including status of forces agreements [SOFAs]), the policies of the HN government, the US ambassador, and AR 195-2. In the absence of such provisions, the following guidelines apply:

- On Army-controlled installations, the USACIDC has the authority to investigate alleged crimes.
- Outside of an Army-controlled installation, the USACIDC may investigate after coordinating with HN authorities.

4-57. In all environments, the USACIDC has the responsibility to investigate all felony crimes involving Army personnel, DA civilians and agencies, and companies working for the Army. The USACIDC investigates war crimes and crimes involving personal and government property affecting the Army's mission (logistics security [LOGSEC]). Other investigations (such as those based on international treaties, SOFAs, and joint investigations with the HN) may be undertaken if requested by the supported commander in support of the overall Army mission. See Chapter 9 for a complete discussion of the USACIDC.

US CUSTOMS OPERATIONS

4-58. The MP support the US Customs Service (USCS), the US Department of Agriculture (USDA), other federal agencies, joint staffs, and commanders who enforce the laws and regulations of the US concerning customs, agriculture, and immigration border clearances. Support to the USCS also includes assistance to federal agencies to eliminate the illegal traffic of controlled substances and other contraband through Army channels. MP support to customs operations are normally performed by specially trained MP customs teams. Although other MP units are not trained in all facets of customs operations, they may assist MP customs teams, the USCS or the USDA, and other federal agencies in the enforcement of applicable laws and regulations. When tasked, the MP/CID supports the investigation of violations of US Codes, DOD or DA regulations, and applicable provisions of SOFAs.

4-59. The MP report violations of customs laws, regulations, inspections, and investigative results to the installation's PM, the supported commander, and affected units. During redeployment from outside the continental US (OCONUS) to CONUS installations, the MP support the USCS or USDA efforts to ensure that personnel, equipment, and materiel meet customs, immigration, and agriculture requirements as stated by all applicable laws and regulations. As with other functions, MWD teams may be employed in support of customs operations for the detection of explosives or narcotics.

During operation Just Cause, an MP platoon temporarily assumed the customs mission at the main terminal of the Torrijos International Airport located just outside of Panama City. Their mission supported the air evacuation of foreign-national civilians and the redeployment of some of the initial-entry US forces.

POLICE INTELLIGENCE OPERATIONS

4-60. The PIO function supports, enhances, and contributes to the commander's protection program, situational awareness, and battlefield visualization by portraying relevant threat information that may affect his operational and tactical environments. This threat information—whether it is police, criminal, or combat information—is gathered while conducting MP functions. The PIO function—

- Demonstrates the MP's/CID's capability to collect relevant threat information actively or passively.
- Ensures that all information collected while conducting MMS, AS, I/R, and L&O functions continues to be reported through the proper channels so that it can be analyzed by the Intelligence Officer (US Army) (S2) or the Assistant Chief of Staff, G2 (Intelligence) (G2) with support from the appropriate MP echelon.
- Coordinates with USACIDC elements to employ data developed by the USACIDC's programs. These programs include—
  - The Combating Terrorism Program as outlined in AR 525-13 and CIDR 195-1.
  - The Criminal Intelligence Program (CIP).
  - Personal-security vulnerability assessments (PSVAs).
  - A crime threat analysis.
  - Logistics-security threat assessments (LSTAs).

NOTE: The MP/CID must ensure that criminal information is released according to existing controls and restraints.

- Maintains constant liaison and communication with the higher echelon S2/G2; psychological-operations (PSYOP) units; HN police and other law-enforcement agencies; joint, combined, interagency, and multinational forces; the staff judge advocate (SJA); the CMOC; civil-affairs teams; and the force-protection officer.

4-61. The MP brigade commander, the battalion commander, and the PM are responsible for the PIO function. As such, each one must determine the best way to employ the available staff resources to monitor the execution of the PIO function within his command.

IPB PROCESS AND PIO FUNCTION

4-62. The IPB is a systematic, continuous process for analyzing the threat and environment in a specific geographic area. It is designed to support staff estimates and military decision making. Applying the IPB process helps the

commander selectively apply and maximize his combat power at critical points in time and space on the battlefield by—

- Determining the threat's likely COA.
- Describing the environment the unit is operating within and the environmental effects on the unit.

4-63. The IPB process consists of the following four steps:

- **Define the battlefield environment.** The S2/G2 identifies the battlefield characteristics that will influence friendly and threat operations, establishes the limits of the area of interest (AOI), and identifies gaps in current intelligence holdings.
- **Describe the battlefield effects.** The S2/G2 evaluates the environmental effects with which both sides must contend. The S2/G2 identifies the limitations and opportunities that the environment offers on the potential operations of friendly and threat forces. This evaluation process focuses on the general capabilities of each force until COAs are developed later in the IPB process. This environmental assessment always includes an examination of terrain and weather, but it may also include discussions of characteristics of geography and infrastructure and their effects on friendly and threat operations.
- **Evaluate the threat.** The S2/G2 and his staff analyze the command's intelligence holdings to determine how the threat normally organizes for combat and conducts operations under similar circumstances. When facing a well-known threat, the S2/G2 can rely on historical databases and threat models. When operating against a new or less known threat, he may need to develop his intelligence databases and threat models concurrently.
- **Determine the threat's COA.** Given what the threat normally prefers to do and the effects of the specific environment in which he is operating, his likely objectives and the COAs available to him are determined. The S2/G2 develops enemy COA models that depict the threat's available COAs. He also prepares event templates and matrices that focus intelligence and identify which COA the enemy will execute (see FM 34-130).

4-64. Although the S2/G2 has the staff responsibility for the command's IPB, he is not the only one who conducts or needs to understand and use the IPB. Every Army commander and staff member must understand and apply the IPB process during the staff planning process. The MP on the battlefield are no exception. The MP employ the IPB process as their first step in developing and implementing the PIO function within their commands.

4-65. During the IPB process, the S2/G2 uses all available databases, intelligence sources/products, and related MI disciplines to analyze the threat and the environment. The PIO function supports this process by providing the S2/G2 with collected police, criminal, and combat information that can directly and significantly contribute to the success of the MI effort. In addition to the combat information, the PIO function provides additional information on possible criminal threats and COAs that may support the S2's/G2's IPB process and that can be used by the commander to upgrade the force-protection posture.

POLICE INFORMATION ASSESSMENT PROCESS

4-66. Like the S2/G2 uses the IPB process to continuously analyze the threat and the environment in a specific geographical area, MP leaders use the PIAP as a tool to continuously collect, organize, interpret, and gain access to police/criminal information in support of the IPB process. Criminal trends may have an impact on the tactical scenario, and the PIAP is a method used to consider this threat and its impact on friendly forces. MP leaders cannot use the PIAP as a substitute for the IPB process—the PIAP complements the IPB (see Appendix E).

PASSIVE MODE PIO

4-67. Every MP conducts the PIO function in a passive mode during their normal day-to-day operations and across the full spectrum of military operations. In the passive mode, PIO are not a stand-alone function; as such, they cannot be separated from other MP functions.

4-68. During the performance of MMS, AS, I/R, and L&O functions, the MP develop and exchange information with other organizations in the AO. The MP obtain information through contact with civilians, NGOs, IHOs, local and HN police, multinational police, and other security forces. If the MP receive, observe, or encounter information (police, criminal, or combat) while performing these functions, they will immediately submit a report to relay information up the chain of command. This report may be in the form of a size, activity, location, unit, time, and equipment (SALUTE) report; a spot report (SPOTREP); or another appropriate report. When the higher echelon (brigade, battalion, or PM) receives this information, it is simultaneously integrated into the ongoing IPB/PIAP and forwarded to the higher echelon S2/G2 (see Figure 4-1, page 4-16).

4-69. If police/criminal information is obtained, the MP—

- Update the previous police/criminal estimates provided to the S2/G2.
- Identify new or potential criminal threats or trends in the AO.
- Consider recommending that the supported commander upgrade the force-protection level.
- Notify adjacent units of the potential criminal threat that may affect their forces.
- Consider reprioritizing MP support to the identified threat area.
- Share information with HN/local police and other agencies.

4-70. If combat information is obtained, the MP—

- Forward the information to the higher headquarters S2/G2.
- Forward the information to the MP chain of command, integrate it into the MP's IPB process and, if necessary, take appropriate action.
- Notify the adjacent unit of the potential threat that may affect their forces.

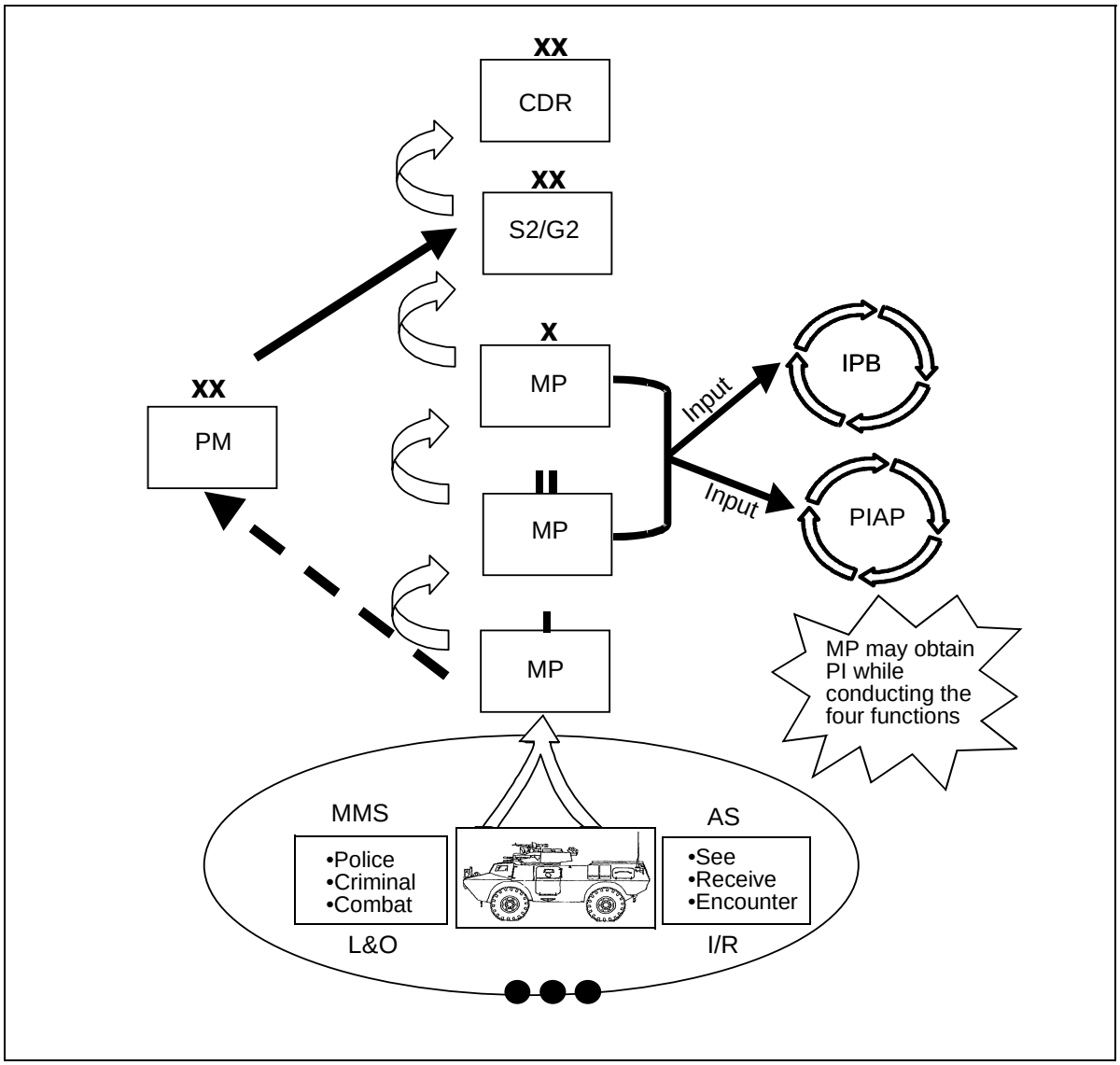

Figure 4-1. PIO—Passive Mode

During Operation Uphold Democracy, an MP team was conducting a TCP as part of a cordon and search operation in Port-au-Prince, Haiti. While performing the task, two civilians approached the MP team informing them of criminal activity in the neighborhood. During the interview, the MP team prepared a sketch of a house and surrounding areas. The team also obtained information describing the criminals and their weapons. Recognizing that the criminal activity was in fact the actions of a political/mercenary group named FRAP, the MP team radioed the platoon leader and forwarded the field interview to higher headquarters. Two days later, a unit from the 10th Mountain Division raided the house, capturing weapons, ammunition, and equipment.

4-71. The preceding vignette demonstrates the MP performing the PIO function in the passive mode. The MP team received the information while conducting a TCP and submitted it through the appropriate chain of command, which resulted in an action taken. This example stresses the importance of submitting information up the chain of command regardless of whether it may be police, criminal, or combat information.

ACTIVE MODE PIO

4-72. The MP perform the PIO function in the active mode and across the full spectrum of military operations when directed by higher headquarters. In this mode, the MP conduct specific MMS, AS, I/R, and L&O missions with the intent to collect information actively in support of the S2's/G2's IPB process or the PIAP.

4-73. When the S2/G2 identifies a gap in the command's knowledge of the threat and the current threat situation, it may be recommended to be included as priority intelligence requirements (PIR). The S2/G2 will then develop a collection plan to assist him in filling this gap. Part of his collection strategy is to select the best collectors available to cover each intelligence requirement. After a thorough analysis (which includes availability, capability, and performance history), the collection manager identifies which collection asset can best be used in response to a given requirement, and the Operations and Training Officer (US Army) (S3)/G3 tasks the asset. If the S2/G2 determines that the MP is the right force to serve as collectors, the S3/G3 will go through the appropriate request channels and task the PM. The S2/G2 will then provide the PM with a specific guideline and a prioritized collection requirement (see FM 34-2).

4-74. On receipt of the mission, the PM will conduct a mission analysis to decide which specific MP function (MMS, AS, I/R, or L&O) is needed to satisfy the S2's/G2's requirement. Once the analysis is completed and the appropriate function selected, the PM will then task subordinate units with the collection mission. Once the mission is completed, the PM may receive another collection tasking or continue with previous MP tasks.

4-75. When the MP commander or the PM conducts the PIAP, he may also encounter a police/criminal information gap. This gap may become the MP commander's police/criminal information requirements (PCIR). If the gap cannot be filled with available data from the S2/G2, the CID, the HN, and other agencies, the MP commander/PM may task subordinate MP units or request CID assistance to support the collection effort. On receipt of the mission, the MP will then conduct a mission analysis and decide which specific MP function (MMS, AS, I/R, or L&O) is needed to satisfy the PM requirement. Once the mission is completed, the MP may receive another collection tasking or continue with previous MP tasks (see Figure 4-2, page 4-18).

4-76. Since any soldier on the battlefield can report police or criminal information, the MP commander or the PM must constantly coordinate and communicate with the S2/G2, PSYOP, and other agencies to obtain information that could be of MP/CID interest. This constant coordination is a key factor for ensuring that the MP/CID has visibility over the police/criminal information that is reported through non-MP channels.

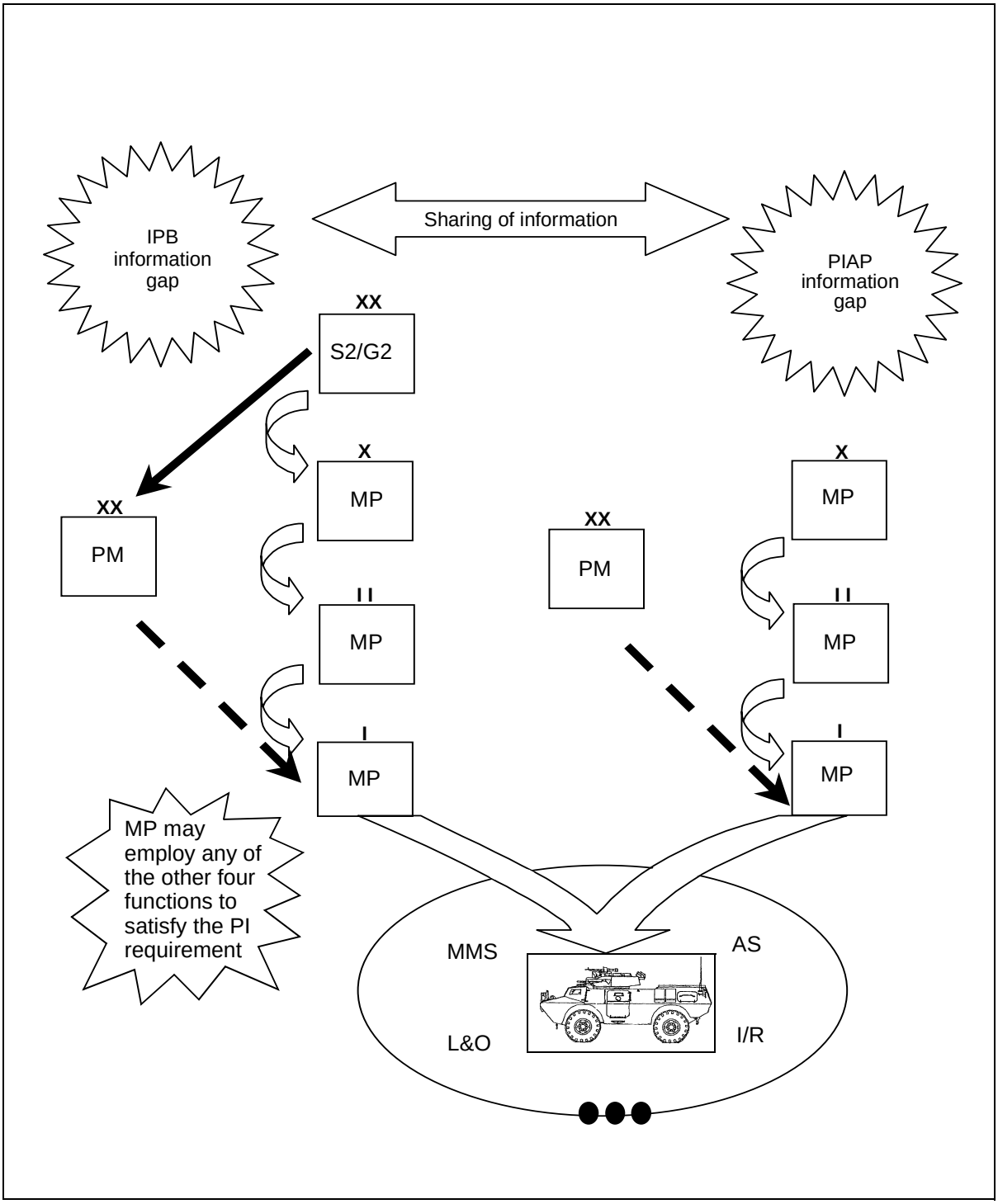

Figure 4-2. PIO—Active Mode

Chapter 5

Military Police Support to Echelons Above Corps

MP units supporting EAC perform combat, CS, and CSS operations. Like the MP supporting corps and divisions, MP units supporting EAC units perform the five MP functions based on available assets and the supported commander's needs.

USAMPS

MP support to EAC includes support to the ASCC and the TSC. The ASCC is responsible for Army Title 10 requirements in support of a combatant commander. This support includes recruitment, organization, supply, equipment, training, servicing, mobilizing, demobilizing, administration, and maintenance functions.

OVERVIEW

5-1. The ASCC may also be responsible for significant DOD- and combatant-commander-designated Army support to other services. As the senior Army commander in the AOR, the ASCC commander tailors and designates ARFOR to accomplish operational-level tasks while conducting major land operations. The ASCC's operational responsibilities include—

- Recommending the proper employment of Army-component forces to the joint-force commander or to the subunified commander.
- Accomplishing operational missions as assigned.
- Selecting and nominating specific Army units for assignment to subordinate theater forces.
- Informing the combatant commander of the Army's CSS effects on operational capabilities.
- Providing data to the supporting operations plans (OPLANs) as requested.
- Ensuring signal interoperability.

5-2. The ASCC provides administrative and logistics (A/L) services to assigned ARFOR and to those of subordinate JFCs. When appropriate, the ASCC delegates the authority for support tasks to a single subordinate Army headquarters. In major operations, the TSC (along with other EAC support commands) would be the ASCC's lead organization for planning, coordinating, executing, or providing required support functions (see FM 100-10).

5-3. The TSC is the senior Army support organization in a theater. Its commander reports to the ASCC or ARFOR commander. The TSC normally operates at the operational level of CSS with links to the strategic and tactical levels. Unity of command is the critical element that the TSC brings to the fight. The TSC is a multifunctional organization that centralizes the

command, control, and supervision of support functions at EAC as directed by the ASCC or ARFOR commander. The TSC's mission is to maximize throughput and follow-on sustainment, including all CSS functions, of ARFOR and other designated supported elements. The TSC is capable of synchronizing logistics and other support operations for the ASCC. It provides area support to EAC units in the COMMZ and sustainment support to tactical forces. This support may include supply, procurement, property disposal, maintenance, transportation, field services, health services, civil-military affairs, MP support, engineer support, religious support, finance support, and personnel and administrative services.

5-4. Units and commands requiring support coordinate with the TSC support-operations staff to secure their initial support, to reestablish support, or to resolve support problems. In a fully developed theater, the TSC coordinates with a corps support command (COSCOM) for support of combat forces, although direct coordination with a division support command (DISCOM) is sometimes necessary. The TSC, augmented by a rear operations center, is also responsible for security operations as directed by the ASCC/ARFOR commander (see FM 63-4).

MILITARY POLICE SUPPORT

5-5. MP support to EAC units is provided through an array of multifunctional MP units. The nature of the operation, METT-TC, and the requirements of the supported commander will determine which type of MP unit is appropriate to augment, assign, attach, or place under OPCON to an EAC unit. The types of MP units that support EAC include CS, I/R, CID, and L&O teams (such as MWD or customs teams).

THE MP BRIGADE (CS)

5-6. The MP brigade (CS) provides MMS and AS to extended LOC within the COMMZ. These supply corridors include ports, inland waterways, railways, pipelines, airfields, MSRs, and MSR critical points. The MP support the users of the COMMZ's LOC by aggressively patrolling the area along the LOC. They play an important role in securing rear areas by performing combat operations against the threat. When properly augmented, the MP brigade headquarters may serve as the TSC's/ASCC's TCF headquarters. The MP provide MMS on the COMMZ MSRs leading into the corps's rear area. The MP implement the plans of HN and US staff elements to control the forward movement of combat resources along the LOC.

5-7. If resources are available, the MP brigade (CS) provides escorts to move US noncombatants (if present) from AA points to theater embarkation terminals. Until the MP brigade (I/R) arrives in theater, the CS MP units also perform EPW, confinement, and other operations normally performed by the MP I/R units.

5-8. The organization of an MP brigade (CS) supporting EAC includes the following:

- A brigade headquarters and headquarters company (HHC).
- Up to six MP battalions (each with up to six companies).

- Numerous L&O detachments and MWD teams.

5-9. Additionally, the ASCC's PM or commander may attach or direct OPCON of customs teams to the MP brigade (CS). Battalion and company organization in the MP brigade is the same as that in the corps MP brigade; however, METT-TC determines the number of battalions and companies. The MP brigade (CS) has additional MP companies to provide security for EAC-specific units/activities such as—

- A unified command.
- An ASCC and TSC headquarters.
- LOC seaports, airfields, and railways.
- EAC ammunition storage areas.
- EAC petroleum terminals and pipelines.

5-10. While the corps MP brigade (CS) MWD teams are employed in a GS role, the MP brigade (CS) MWD teams are employed to augment seaport security and to conduct inspections of postal items to detect explosive materiel and narcotics.

5-11. The C^2 within the MP brigade (CS) is consistent with that in any Army brigade. The MP brigade commander works directly for the EAC commander, the battalion commander works for the brigade commander, and the company commander works for the battalion commander. However, this usual C^2 relationship may be altered briefly (based on METT-TC) to enhance the overall EAC combat capability for responding to a Level II threat. For example, MP units operating within an ASG's AO may be under the OPCON of the ASG's rear-area operations center (RAOC), which directly tasks MP units responding to Level II threats. The same is true for placing MP units under the OPCON of the EAC's TCF headquarters for responding to Level III threats. Any conflict in mission priorities is resolved through MP C^2 channels.

5-12. The MP brigade commander is both the MP brigade commander and the EAC's PM. He employs his assets according to METT-TC and the commander's concept of operations. Factors affecting his employment of MP assets include the—

- Nature of the operation (joint, combined, or multinational).
- HN's ability to provide MP-related support (such as port security).
- Custody and location of EPWs/CIs during internment operations until I/R units arrive in theater.
- Number of kilometers of the MSR in relationship to movement-control requirements.
- Number and kinds of critical facilities.
- Number of HRP requiring close-in security.
- HN's ability to control the civilian populace, refugees, and dislocated civilians.
- Supply distribution strategy.
- Risk acceptance and threat in the AO.
- Communications requirements (such as using teams as relays).

5-13. Whenever possible, the MP brigade's AO coincides with the territorial responsibility of the supported command. The MP brigade commander assigns

the MP battalion's AO by the above factors as well as by METT-TC. For example, the AOR for an MP battalion may be a large population center of larger geographical areas in which CSS complexes and MSRs are located. But as employment factors and the commander's needs change, so will the MP's AOR. The MP brigade commander must move and tailor his forces to meet the current and projected mission requirements. Unlike many other EAC assets, MP units require 100 percent mobility to shift AOs frequently and rapidly. The following vignette depicts the required MP flexibility to support EAC operations:

> During Operation Desert Shield/Storm, MP units were supporting and moving units throughout their AOs at a such an extraordinary rate that many of them had to relocate their headquarters multiple times just to keep pace with their changing AO.

5-14. Most EAC MP assets are employed along LOC and around areas of high troop concentration. Few EAC MP are dedicated to support fixed commitments (such as ports, air bases, and headquarters [discussed in paragraph 5-8]). When supporting fixed commitments, MP units provide a mobile security screen, and they man static positions when directed or when based on METT-TC. The MP brigade (CS) may have to plan for and actually perform the evacuation and internment of EPWs/CIs and the confinement of US military prisoners until the MP brigade (I/R) arrives.

THE MP BRIGADE (I/R)

5-15. US policy requires that all persons held in Army custody be accorded humane care and treatment from the moment of custody to their final release. The policy applies to detained or interned civilians as well as to EPWs and confined US military personnel. This policy is equally binding on all US troops (see FM 19-40).

5-16. The ASCC or the TSC supports US laws, regulations, policies, and international agreements by providing personnel, administrative, morale, internment, resettlement, and confinement services for the TO. The TSC's MP brigade (I/R) in the TO provides this support. However, since most I/R units are in the reserve components, the initial I/R operations (as mentioned above) may have to be conducted by the MP brigade (CS). Once the I/R unit arrives in the AO, it is responsible for—

- Providing firm but humane control of EPWs/CIs and dislocated civilians.
- Coordinating with HN personnel, military territorial organizations, civilian police authorities, NGOs, private volunteer organizations, and US federal agencies on matters pertaining to I/R operations.
- Performing C^2 operations for all I/R units.
- Controlling, employing, and releasing EPWs/CIs as set forth by the Geneva convention and other international laws and by the UN and other governmental bodies.
- Handling US military prisoners.

5-17. In a mature theater in which large numbers of EPWs are captured, the EPWs' requirements may exceed the capacity of the MP brigade (I/R). In this instance, an I/R command is established. An MP command (I/R) has two or more MP brigades (I/R) and will normally be assigned to the ASCC. When the MP command (I/R) assumes OPCON of the MP brigades (I/R) from the lower echelon, it assumes that echelon's I/R mission.

5-18. If the US decides to transfer captured EPWs/CIs to the HN or to another nation, the US must ensure that the nation is a party to the Geneva convention and is willing and able to comply with the convention. In this case, the number and type of I/R MP units required for processing and retaining EPWs/CIs before the transfer is based on agreements and on METT-TC. Additionally, the MP brigade (I/R) is assigned I/R teams that are located at the processing and transfer points and at the HN or third-country EPW camps. The MP brigade (I/R) liaison team will supervise these dispersed teams to ensure that the HN or the third country provides adequate care and security of US-captured EPWs/CIs and that accountability is maintained according to the Geneva convention.

5-19. The MP brigade (I/R) HHC is the C^2 element for the brigade's assets. It consists of the following elements:

- A brigade command section.
- A company headquarters.
- An Adjutant (US Army) (S1).
- An S2.
- An S3.
- A Supply Officer (US Army) (S4).
- A Civil-Affairs Officer (US Army) (S5).
- A Communications Officer (US Army) (S6).
- Finance and accounting.
- Medical operations.
- Public affairs.
- A unit ministry team.
- An SJA.
- An inspector-general (IG) section.

5-20. Other brigade assets may include the following:

- An MP I/R BLD.
- An I/R information center.
- An MP escort-guard company.
- An MP I/R battalion headquarters.
- MP I/R (EPW/CI) detachments.
- MP I/R (confinement) detachments.
- MP guard companies.
- MWD teams.
- Processing squads, processing liaison teams, camp liaison teams, and evacuation teams (all as required to support EPW transfer or to conduct an out-of-theater evacuation).

5-21. The MP brigade (I/R) subordinate units are employed most often in the COMMZ near CSS facilities and are placed near sea, air, and rail terminals. They receive, process, and intern EPWs/CIs; confine US military prisoners; or assist in the resettlement of refugees or dislocated civilians.

5-22. The MP brigade (I/R) escort-guard company supports the evacuation of EPWs/CIs from the CZ. The company has a company headquarters and four platoons. The escort-guard company requires sufficient mobility to transport MP personnel to the CZ and to operate mobile teams while escorting the EPWs/CIs. The MP go forward to the corps's holding area to take custody of the EPWs/CIs. They may go forward to division collecting points, if distances and resources permit. Using any means of available transportation, the MP ensure that the EPWs/CIs are quickly evacuated to MP battalions (I/R) in the COMMZ. Close coordination with the EAC and corps movement-control centers and the corps MP brigade is required to ensure that transportation assets returning to the COMMZ are employed to evacuate EPWs/CIs from the corps's holding area. Walking wounded EPWs/CIs are evacuated by the same means as other EPWs/CIs, while litter patients are evacuated through medical channels. Guarding EPWs/CIs while in the MEDEVAC channels and during their hospitalization is not an MP mission; therefore, there is not an MP force structure to support this mission. In most instances, the impact of having the MP perform this mission causes trade-offs in missions for which they are responsible.

5-23. The theater MP brigade (I/R) and out-of-theater MP brigade (I/R) subordinate units will evacuate EPWs to internment sites within CONUS (if directed). The theater brigade structure is based on the projected capture rate over time and available out-of-theater transportation assets (frequency and capacity). The out-of-theater brigade structure is based on the total EPW/CI population, the number of internment sites, transportation nodes, and escort requirements. Theater escort-guard MP move the EPWs/CIs to the seaport and aerial port of embarkation (SPOE/APOE). The escort-guard MP assigned to the out-of-theater brigade escort the EPWs/CIs from the theater ports of embarkation (POEs) to the out-of-theater internment sites. The out-of-theater brigade is assigned an I/R evacuation detachment, which is employed at and coordinates the evacuation from the theater POEs, through the out-of-theater ports of debarkation (PODs), to the out-of-theater facilities.

THE MP BATTALION (I/R)

5-24. The MP battalion (I/R) is a modular organization and can be configured to operate internment facilities for EPWs/CIs, confine US military prisoners, or resettle dislocated civilians. When performing EPW/CI internment operations, the MP brigade (I/R) has up to 7 MP battalions (I/R); when augmented with the appropriate number of BLDs, it has up to 21 MP battalions (I/R). The ASCC, the TSC, and the MP brigade (I/R) must consider that the requirement to establish an MP battalion (I/R) internment facility is resource intensive. Therefore, MP I/R units, other supporting units, supplies, and equipment for the EPWs/CIs should arrive in theater ahead of the projected EPW/CI arrival at the internment facilities. Early arrival should be based on the time required to establish fully operational facilities (construct and man) and resupply operations before the EPWs/CIs arrive.

5-25. The MP battalion (I/R) has a command section, a company headquarters, and various staff sections. The staff sections provide the core battalion-level capabilities to conduct internment operations. The modulated design expands as the EPW/CI population increases. The battalion is assigned up to four detachments, two guard companies and, if needed, a processing squad. When fully operational, an MP battalion (I/R) operates an enclosure capable of interning 4,000 EPWs/CIs. The battalion mission centers on eight 500-man compounds. The battalion operates the compounds in close proximity to maximize its resources for the security and internment of the EPWs/CIs. This includes the resources needed to employ EPWs/CIs as a labor force according to the provisions of the Geneva convention.

5-26. Each MP detachment (I/R) (EPW/CI) operates two 500-man compounds and provides augmentation to the battalion staff sections to support 1,000 EPWs/CIs. Each guard company is capable of providing security for 2,000 EPWs/CIs. The guard company has a company headquarters and three platoons. The guard company requires sufficient mobility and communications to support routine battalion missions. While minimum mobility and communications is required to support EPW/CI internment operations, on-site guard personnel must often move considerable distances guarding labor groups performing work projects throughout the COMMZ.

5-27. The MP (EPW/CI) processing squad is capable of processing eight EPWs/CIs per hour and includes interpreters to support the processing. If processing squads are required to augment MP battalions (I/R), the operational requirements will be based on METT-TC.

MP-Battalion Resettlement Operations

5-28. The basic organization used for EPW/CI internment is used for resettlement operations. The primary mission-focus change is from guarding EPWs/CIs to protecting and controlling dislocated civilians. As such, an MP battalion (I/R) with four detachments and two guard companies is capable of supporting 8,000 dislocated civilians. However, the MP battalion (I/R) may require augmentation to conduct L&O operations associated with the resettlement. Augmentation may include the full scope of PM functions (operations, investigations, physical security, MP-station operations, and patrols) and civil affairs.

MP-Battalion Confinement Operations

5-29. When configured with the MP detachment (I/R) (confinement), the MP battalion (I/R) is capable of confining US military prisoners. The MP detachment (I/R) (confinement) provides trained corrections and support personnel required for confinement operations. As with the EPW/CI configuration, the modular confinement structure expands as the US prisoner population increases. With three confinement detachments and three guard companies, the MP battalion (I/R) has a maximum capacity of handling 1,500 US prisoners. Generally, only one MP brigade battalion (I/R) is configured for confinement, but the actual number will depend on the number of US prisoners requiring confinement within a theater. While theater policy for confinement operations remains with the ASCC commander, it is the MP brigade (I/R) that executes the mission.

5-30. When possible, soldiers awaiting trial remain in their units unless reasonable grounds exist to believe that they will not appear at the trial, the pretrial hearing, or the investigation or that they will engage in serious criminal misconduct. Under either of these two pretrial confinement instances, the commander must also reasonably believe that a less severe form of restraint (such as conditions of liberty, restriction in lieu of apprehension, or apprehension) is inadequate. When these circumstances exist and other legal requirements are met, US military personnel may be placed in pretrial confinement under the MP's direct control. Commanders may choose to establish field confinement facilities within their AO. However, corps and division MP companies have the expertise to operate only a field detention facility for a limited period of time. These units cannot operate a confinement facility and have neither the resources nor the capability to operate such a facility on an extended basis. Therefore, all confinement is consolidated in the COMMZ whenever possible.

5-31. All assets of the MP battalion (I/R) (confinement) are employed to detain, confine, sustain, and protect US prisoners. As with the battalions conducting EPW/CI and resettlement operations, the battalion conducting confinement operations is generally located in the rear of the COMMZ, near logistics and transportation support. This allows US prisoners to be moved as quickly as possible from the corps's area to the COMMZ's confinement facility. Movements of US prisoners from the COMMZ to CONUS will be according to DA policy.

Chapter 6

Military Police Support to Corps

Corps MP support their command by performing the MP functions critical to the success of their tactical commander's concept of operations.

USAMPS

Corps are the largest tactical units in the US Army. They are the instruments by which higher echelons conduct operations at the operational level. Higher headquarters tailor corps for the theater and the mission for which they are deployed. They contain organic combat, CS, and CSS capabilities to sustain operations for a considerable period of time. Corps are capable of operating in a joint and multinational environment, providing C^2 for up to five divisions and covering up to 35,000 square kilometers.

OVERVIEW

6-1. MP support to a corps is provided by an MP brigade (CS) assigned to each corps. The MP brigade provides combat, CS, and CSS throughout the corps's AO. However, subordinate MP units are not assigned to subordinate corps units. Instead, the MP brigade commander gives them an AO based on the corps commander's concept of operations. When possible, MP battalion AOs coincide with those of the CSG RAOCs.

6-2. The corps MP provide combat power within the command's rear area. They perform combat operations to counter Level II forces and to support the defeat of Level III forces. When properly augmented, the MP brigade may serve as the corps's TCF. The corps MP also provide a critical link between MP operations in the division and in the COMMZ. The corps MP support division commanders by helping the division MP conduct sustainment operations. The corps MP coordinate with the division MP for mutual support.

THE MILITARY POLICE BRIGADE (COMBAT SUPPORT)

6-3. The MP brigade (CS) supporting a corps contains a brigade headquarters, up to six MP battalions (CS), numerous L&O detachments, and MWD teams. Each MP battalion (CS) has up to six MP companies (CS). As with the EAC's MP brigade (CS), the number of battalions and companies is determined by METT-TC. The corps MP brigade (CS) has additional companies to support each division and to provide security for the corps and COSCOM headquarters and corps ammunition storage areas (see Figure 6-1, page 6-2).

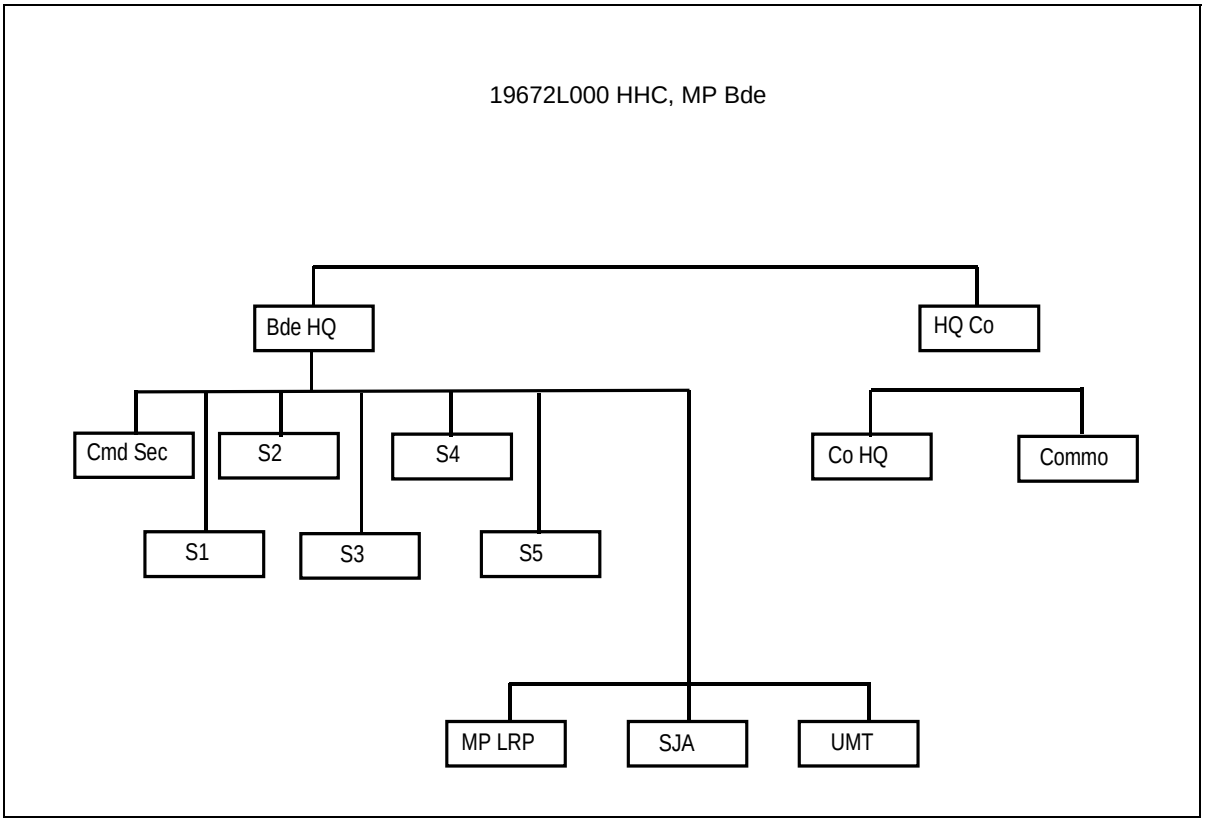

Figure 6-1. Military Police and USACIDC Organizations

6-4. The MP brigade HHC provides C^2 and A/L support to the brigade. The brigade HHC consists of a company headquarters and a brigade headquarters that contains the commander's immediate staff. The staff officers supervise the brigade's major organizational elements, including the—

- S1, S2, S3, S4, and S5.
- MP long-range plans (LRP) section.
- Communications section.
- SJA.
- IG.
- Public affairs.
- Unit ministry team (UMT).

6-5. The MP brigade (CS) command sergeant major (CSM) requires mobility and communications capabilities to execute his duties and responsibilities. The MP LRP section works with the corps G3 plans element, operating out of the corps main CP.

6-6. The MP battalion headquarters and headquarters detachment (HHD) provides C^2 for MP CS companies and any other assigned or attached MP elements. The battalion HHD consists of a detachment headquarters and a

battalion headquarters that contains the battalion commander's staff. The staff officers supervise the major organizational elements, including the—

- S1, S2, S3, and S4.
- Communications and support sections.
- UMT.

6-7. As with the MP brigade (CS), the battalion CSM requires mobility and communications. The support section is vital to an MP battalion commander's ability to sustain his widely dispersed assigned or attached units during the performance of all five MP functions, primarily the MMS and AS functions.

6-8. The MP company (CS) provides support to an assigned AO. The company has a company headquarters, an MP operations center, a combat-medic section, and four platoons. The company headquarters provides maintenance, supply, communications, mess, and medical support to the unit. An MP operations center supports the unit's operation, conducting and planning for all five MP functions. The MP operations center includes three MP teams as the company-level response force.

6-9. The MP L&O detachments provide support to an assigned AO. The headquarters provides A/L support. The operation team plans and supervises desk operations, the traffic-accident and MP-investigation teams, and the force-protection teams. As with the EAC MP brigade (CS) detachments, requirements are based on the population supported and on METT-TC.

6-10. The number of assigned MWD teams is significantly less than those assigned to the EAC MP (CS) or (I/R) brigades. A kennel master, five explosive/patrol teams, and four narcotics/patrol teams are normally assigned to the corps MP brigade (CS). They are employed based on METT-TC.

COMMAND AND CONTROL

6-11. The C^2 in a corps MP brigade (CS) is consistent with that of any Army brigade. The MP brigade commander commands the brigade and all attached personnel. Battalion commanders work for the brigade commander. The MP company commanders receive their orders and work for their respective battalion commanders and direct their platoon leaders according to mission requirements.

6-12. When corps MP assets are sent to augment the division PM or the MP company, they are placed under the OPCON of the division PM for as long as the unit is needed in the division area. This command relationship is applicable to company-size organizations and smaller. If an MP battalion (or larger MP unit) augments the division, then the division PM will not exercise OPCON of that MP unit. The MP battalion will be placed OPCON as designated by the division commander but not under the division PM. One L&O detachment is normally attached to the supported division and placed OPCON to the division PM. However, MP leaders at each level establish an MP C^2 relationship based on METT-TC and the supported commander's needs.

EMPLOYMENT

6-13. Each corps MP brigade commander employs his assets according to METT-TC, the needs of the forces operating in his AO, and the priorities of the corps commander. Few MP assets in the corps area are employed to support fixed commitments. Instead, based on a broad consideration of the enemy and friendly situations, the corps MP are employed to support friendly forces engaged in combat, CS, and CSS operations. Since MP forces are dispersed throughout the corps area, the concentration of US forces, the location and vulnerability of critical sites, and the number of kilometers of the MSR to be controlled influence the designation of MP assets in the AO.

6-14. The MP brigade commander establishes his MP concept of operations based on the corps commander's concept of operations. His successful employment of MP assets depends on his foreseeing where the battle will be rather than where the battle is. Based on the rear-area IPB and PIAP, the MP brigade commander allocates and shifts resources to ensure the accomplishment of priority missions. This ensures the continuous support and forward sustainment of combat units and the safety of CSS units operating in the corps rear and sustainment areas.

6-15. To support the MP brigade commander's planning, the MP at brigade headquarters operate from several locations. Most of the staff locates in the vicinity of the corps rear CP where they can interface with the corps staff responsible for planning and executing rear operations. The control element of the brigade headquarters must be located where it can command and control its subordinate units. The brigade commander and his staff decide the best place to locate this element. The planning element of the headquarters locates near the corps main CP where it can interface with the corps commander's coordinating, special, and personal staffs. From there they monitor MP operations, integrate MP support with the corps plans cell for future operations, and learn the enemy situation through the G2's threat analysis almost immediately. The detailed information on rear-area activities and operations provided by the corps staff enhances the accuracy of the MP LRP.

6-16. The brigade S3 section provides the day-to-day planning and execution of an MP mission. The section provides a responsive CP that can relocate frequently throughout the AO. The S3 will normally provide liaison personnel to the corps rear CP, selected COSCOM units, interagencies, or other headquarters (based on mission requirements). When possible, battalion AOs coincide with the AOs of the CSG RAOCs. The MP brigade commander usually tailors battalions' AO boundaries to ensure responsive and flexible support across the corps's AO. He pays particular attention to the LOC behind the most heavily committed division and the critical bases and facilities in that area. He also ensures that the MP are available to respond quickly to combat operations throughout the entire corps rear area or during sustainment operations.

6-17. The MP brigade commander, coordinating with his battalion commanders, locates the MP companies where they can provide combat and CS power throughout the corps's AO. He bases his decision on the—

- Number and composition of urban areas.

- Location of CS and CSS units.
- Location of critical facilities (such as the headquarters, ammunition storage areas, and airfields).
- Expected threat.
- Level and frequency of support needed by the commander.
- Current and projected tactical situation.
- MSR network, including choke points and critical bridges and tunnels.
- Number of supported divisions and requirements.

6-18. The prioritization of MP missions is especially crucial during the early stages of the deployment when it is unlikely that an MP brigade commander will have a full complement of CS companies. Augmenting the division MP company with corps MP assets may not be possible at that time. Until it is, the MP brigade commander must locate corps MP assets to help meet the needs of the division while fulfilling the needs of the corps.

6-19. Like the brigade commander, battalion commanders plan the employment of their companies and platoons using METT-TC. Certain corps needs are constant. One MP company is allocated to provide security for the COSCOM, and one MP company is allocated to provide security for the corps's main CP. One platoon from that company may be used to secure the corps tactical CP or the jump CP. One or more platoons will also help secure the corps's rear CP. The number of MP assets allocated for a corps-level EPW/CI holding area and escort is based on METT-TC. However, a minimum of one platoon is dedicated to operate the corps's EPW/CI holding area and a minimum of one platoon per division is allocated for evacuating EPWs/CIs from division collection points. Additional MP assets may be allocated to provide security for the corps's ammunition storage area and ASPs supporting the divisions. The MP battalion commander places his companies where—

- MP assets support the brigade commander's concept of operations.
- The MP can support troop concentration, bases and base clusters, road networks, and critical areas.
- The MP can aggressively patrol critical terrain and monitor LZs and DZs to detect or deny enemy interference.
- The MP can respond to Level II threats.
- The MP can support the movement of combat resources throughout the AO.
- The MP can remove EPWs/CIs from division collection points.
- The MP can influence stragglers, refugees, and dislocated civilians.

6-20. Battalion commanders may choose to place a company behind the division rear boundary. This can help to ease the coordination between the corps MP and the division MP.

Chapter 7

Military Police Support to Division

Division MP provide essential support to the forward tactical commander. The MP provide a flexible, mobile, and lethal force ready to be employed in combat or CS operations.

USAMPS

The division is a large Army organization that trains and fights as a tactical team. Largely self-sustaining, it is capable of independent operations. The division is a unit of maneuver organized with varying numbers and types of combat, CS, and CSS units. Divisions fall mainly into two categories—heavy or light. The first category includes heavy divisions, their variants, and the Division XXI digitized heavy division. The second category includes the light infantry, airborne, and air-assault divisions. Each division can conduct operations over a wide range of environments. The success of Army operations depends on the success of its divisions.

OVERVIEW

7-1. In corps operations, divisions are normally comprised of three maneuver brigades, each with up to nine maneuver battalions, artillery battalions, aviation battalions, and supporting CS and CSS units. Divisions perform a wide range of tactical missions and are self-sustaining for limited periods of time. The corps augments divisions as the mission requires. All divisions must be able to deploy and conduct offensive, defensive, stability, and support operations. Airborne and air-assault divisions must be able to conduct forced-entry operations. Divisions may be part of a JTF or serve as the ARFOR headquarters.

7-2. MP support to a division is provided by an organic MP company that includes the PM and his staff (assigned to each division) and is augmented by the corps MP brigade. The division MP company provides support in the DRA and in the maneuver brigade rear area. It is fully mobile in order to relocate frequently under short notice. While division MP companies are capable of performing all five MP functions, they must be augmented by corps MP/CID to fully perform all five MP functions throughout the division's battle space. The division PM must receive at least one corps MP company for GS missions in the DRA, one L&O detachment for L&O missions, and one CID detachment for criminal investigations and LOGSEC. In a mature theater (or based on METT-TC), the division PM can expect two corps MP companies. In addition, the division PM may request a corps MP battalion headquarters to provide C^2 to corps MP units operating in the DRA or to perform missions as a TCF. Because the need for MP support exceeds division organic assets (and many

times exceeds augmenting corps MP assets), careful planning of MP employment is essential.

DIVISION MILITARY POLICE COMPANY

7-3. The organization of the division MP company is set by specific tables of organization and equipment (TOE) and is designed to support a specific type of division. Regardless of the type of division, the assets in a division MP company enable a PM and his supporting staff to supervise the performance of all five MP functions. The PM coordinates the employment of the MP assets in the division's AO through his PM section. The division MP company contains a headquarters, a PM section, a medic section, and three to six platoons.

COMMAND AND CONTROL

7-4. The C^2 of the division MP company extends downward from the tactical commander to the division PM. The division PM is the division commander's special staff officer. Under normal circumstances, he works for the chief of staff. The division PM has OPCON of the division MP company and MP assets that have been provided by the corps. The division PM plans and employs all of the organic, assigned, or attached MP according to METT-TC. He anticipates the support needs of the division commander and plans the employment to meet his needs. After learning the division commander's concept of operations and estimating the situation, the division PM decides which MP functions are critical to accomplish the commander's mission. He then recommends the allocation of resources, tasks his assets, and establishes the priority of support.

7-5. When the division MP company is augmented by corps MP platoons, the platoons are placed under the direction of the division MP company commander, who assigns an AO to each platoon. When corps MP assets augmenting the division make up a company, the company is attached to the division. The company then comes under the OPCON of the PM, who assigns it an AO. The augmenting corps MP company is usually given an AO from the division rear boundary forward. However, this assignment is flexible and based on the division commander's needs as set forth by the division PM. The four platoons of that corps MP company perform all five MP functions in that AO. Additionally, the corps MP brigade (CS) L&O detachment supporting a division is attached to the division and OPCON to the division PM.

7-6. The division MP company commander directs the employment of company assets. Through his company headquarters, he provides administrative, maintenance, and logistical support to the PM section and to the company's platoons that are dispersed throughout the division's AO. These sections are mobile to support the platoons without delay despite the extended distances that may be separating them. The company commander is also mobile. He travels the extended distances from one platoon area to another when checking on the status of his soldiers and resolving the problems affecting mission accomplishment. The division HHC provides mess support. Personnel administration is handled by the company headquarters and the DISCOM. The number and kind of assets in a division MP company and the configuration of its platoons and squads are determined by the type of division to which the company is assigned.

NOTE: See the consolidated TOE update that is published yearly for complete details (base and objective) for all MP TOEs.

7-7. At the direction of the division commander, the division band may be available to perform its secondary mission of supporting MP operations. When the intensity of the conflict prevents the band from performing its musical mission, the division commander may direct it to augment the MP company. The band, normally employed as a unit under the direction of the bandmaster, is under the OPCON of the MP company commander while augmenting the MP. When tasked to augment MP assets, band members may be employed to augment MP security at the division main CP or to augment perimeter security at the division EPW/CI collection point. The band is released to perform its primary mission as soon as the tactical situation permits.

MILITARY POLICE EMPLOYMENT

7-8. The employment of division MP companies differs somewhat with the type of division to which they are assigned. In heavy divisions, the division MP companies provide GS to the DRA and DS to the division's maneuver brigades. When the platoon is providing DS to a maneuver brigade, the MP platoon leader coordinates all logistical support with the supported brigade. A platoon's DS relationship is seldom interrupted. However, METT-TC may require weighing MP support to the maneuver brigade tasked as the main effort or employing all platoons in a division MP company to function as a unit (such as during division-size river-crossing operations or deliberate breaching operations). In light divisions, the MP provide only GS to the DRA or during sustainment operations. Support exceptions are addressed under MP support to airborne and air-assault divisions, discussed later in this chapter.

7-9. In the division (where flexible support of an austere force is crucial), the division PM must have a clear understanding of situational awareness. To obtain current information for projecting MP needs in the division area, he must be mobile and be able to conduct split-cell operations. The assets available to the PM include the division MP company and at least one corps MP company. Corps augmentation is required for sustained operations and for special operations such as river crossings, dealing with dislocated civilians, and refugee internment or resettlement. The division PM coordinates with the corps PM and the MP brigade or CID commanders for—

- Evacuating and guarding EPWs/CIs from division to corps.
- Providing law-enforcement assistance to HN forces in the division's AO.
- Providing corps augmentation for the division's AO, convoy security, LOC security, AS, R&S, L&O, and other missions. These other missions may include augmentation for security of the division main CP, ASPs, and other critical facilities.
- Integrating, sharing, and exchanging police intelligence between corps and division MP elements.
- Providing CID support.

SUPPORT TO THE HEAVY DIVISION

7-10. The Army's armored and mechanized infantry divisions (normally referred to as heavy divisions) provide mobile, armor-protected firepower that is normally employed for their mobility, survivability, lethality, and psychological effect (shock) on the enemy. These divisions destroy enemy armored and mechanized forces, and they can seize land areas and secure key terrain. Because of their strategic lift requirements, heavy divisions are slow to deploy from home staging bases into an AO. They have high consumption rates of supplies and have limited use in restrictive terrain. These capabilities and limitations are key factors in planning effective and efficient MP support throughout the division's AO.

7-11. In the heavy divisions, the PM section is organized to support split-cell operations at the main and rear CPs. The PM must be mobile to ensure that he is fully aware of the current status of critical MP operations. Therefore, the deputy PM (DPM) locates in one of the PM cells and—

- Handles the section's routine operations.
- Monitors ongoing division operations and MP support.
- Helps provide long-range planning and interface with the primary division staff.
- Forwards PM taskings to the division MP company commander.

7-12. The DPM and the operations sergeant normally set up operations at the division main CP where they can coordinate requirements with the division staff personnel. The company headquarters is initially located near the division rear CP in the division support area (DSA). Once augmentation arrives from the corps, the headquarters relocates with one of its GS platoons operating behind the brigade rear boundary. However, this location could be changed based on METT-TC, the supported commander's needs, and the company commander's idea of where he can exercise better C^2 for his unit.

7-13. The Army of Excellence (AOE) heavy division MP company has six platoons. Three platoons provide support to each maneuver brigade and are designated as DS. The other three platoons are designated as GS platoons. One MP platoon provides security for the division main CP; one provides security for the division's EPW central collection point; and one performs other MP operations within the division rear.

7-14. The GS MP platoons' AOs are configured based on METT-TC and the availability of MP augmentation from the corps. The DS MP platoons' AOs coincide with the supported maneuver brigade's boundary. Each platoon headquarters locates within its brigade's support area or any other area where it can best provide and receive support. To accomplish its mission, each DS platoon requires a minimum of two squads, each with three teams. One squad operates the EPW/CI collection point. The other squads perform MMS and AS operations. All MP platoons are capable of performing all five MP functions. However, performance of these functions is prioritized based on METT-TC and the division commander's concept of operations. The division PM, the company commander, and METT-TC dictate how these platoons should be tasked-organized to accomplish the mission.

SUPPORT TO THE LIGHT INFANTRY DIVISION

7-15. The AOE light infantry division (LID) is one of the most rapidly and strategically deployable divisions. It fights as part of a larger force in war or conducts missions as part of a joint force in MOOTW. Its C^2 structure readily accepts any augmentation forces, permitting task-organizing for any situation. The augmentation required for the division is largely determined by METT-TC. The division's capabilities allow it to exploit the advantages of restricted terrain and limited visibility. It achieves mass through the combined effects of synchronized small-unit operations and fires rather than through the physical concentration of forces on the battlefield. These characteristics are key factors in planning and employing MP assets in support of the LID.

7-16. The LID MP companies are capable of performing all five MP functions. However, their performance of these functions is prioritized based on METT-TC and the division commander's concept of operations. Contrary to the heavy division MP company, the LID MP companies are much smaller. The constrained size of the LID MP companies makes corps MP augmentation crucial to the sustainment of MP operations. Additionally, the LID MP company is the only MP unit with the capability of antiaircraft support through the use of shoulder-fired air-defense weapons.

7-17. The company has three GS platoons to support the division. No platoons are provided to the maneuver brigade. One platoon is normally located in the vicinity of the division main CP so that its resources can help support CP security. Another platoon locates in the DSA and operates the division EPW/CI collection point. The last platoon has an AO configured according to METT-TC and the commander's priority of MP missions. Each GS MP platoon has a headquarters and three squads, each with two teams. The PM section is located in the vicinity of the division main CP. The exact location is based on the current operational status and on METT-TC.

SUPPORT TO THE AIRBORNE DIVISION

7-18. The AOE airborne division can rapidly deploy anywhere in the world to seize and secure vital objectives. It conducts parachute assaults to capture initial lodgments, executes large-scale tactical raids, secures intermediate staging bases (ISBs) or forward operating bases (FOBs) for ground and air operations, and rescues US nationals besieged overseas. It can also serve as a strategic or theater reserve as well as a reinforcement for forward-presence forces. The airborne division can assault deep into the enemy's rear area to secure terrain or to interdict enemy supply and withdrawal routes. It can seize and repair airfields to provide a FOB and airheads for follow-on air-landed forces. It is capable of all other missions assigned to LIDs. The airborne division does not have sufficient armored protection to defeat heavier armored formations at close range. Therefore, engagements with enemy armored formations require special considerations. Antitank weapons in the division compensate for, but do not completely offset, this deficit.

7-19. Airborne divisions conduct operations in two phases—assault and defense. The division accomplishes the assault phase in three stages. First,

they deploy; second, they establish the airhead; and third, they extend the logistics base and build their force.

7-20. Like other division MP companies, those assigned to the airborne division are employed to support their division commander's concept of operations. The airborne MP company has four platoons, each having three squads with two teams. Normally, the company headquarters and one of the platoon headquarters colocates with the PM section. The division PM's exact location depends on METT-TC. During the assault phase, the airborne division MP company provides DS to the assault brigade. The remaining platoons provide MMS and AS in the vicinity of the division main CP.

7-21. The nature of airborne operations makes the capture of EPWs likely. Therefore, during the first stage of the assault phase, the priority of MP support is given to EPW operations. After assembling the DZ or LZ, the MP collect EPWs captured during the assault. Combat elements are relieved of EPWs as far forward as possible. In airborne operations, EPWs are held for later movement to a central collection point. During the first stage of the assault, the MP perform limited straggler and refugee control and undertake AS operations, when possible.

7-22. MP support is reevaluated after the airhead is established in the second stage of the assault. The PM takes in consideration personnel and equipment flow, roadways, and security requirements to shift MP support priorities. As the entire operation matures, MP support may expand to include all five MP functions.

SUPPORT TO THE AIR-ASSAULT DIVISION

7-23. The air-assault division executes tactical missions at operational depths to achieve strategic results. It is capable of launching brigade-size air assaults of nearly 4,000 soldiers from either an ISB or a tactical assembly area (TAA). Within 6 hours, this air-assault task force (AATF) can attack an opposing force, occupy and defend key terrain, or establish a FOB (out to 150 kilometers) from which even deeper operations can be executed. Air-assault operations are terrain independent, but they rely on suitable weather and a detailed attrition/assessment of enemy capability—particularly air-defense assets along air corridors and in the objective area. The air assault is preceded by detailed, lethal and nonlethal condition settings, culminating in a comprehensive condition check before execution.

7-24. As the corps AATF unit, the brigade combat team (BCT) task-organizes and habitually trains with both aviation lift and attack (Apache) battalions. An air-assault division MP company has four platoons, each having three squads with two teams. To facilitate operations, air-assault division MP platoons are habitually aligned with each of the three AOE BCTs; however, as with aviation assets, the MP are task-organized to support the main effort's BCT/AATF. When conducting these operations, two MP platoons may be tasked to provide support; one is available to posture and participate in the air assault, and the other conducts AS and MMS operations at the pickup zone (PZ). This second MP platoon may further provide MMS and accompany a ground-assault convoy (GAC) to the objective, or it may remain at the PZ to receive EPWs returning on aircraft from the objective area. The mission of

conducting MMS along this vulnerable ground LOC is particularly critical if the AATF objective is a FOB from which further division operations will expand.

7-25. MP participation in the actual air assault competes for heavy lift with FA and air-defense systems, as well as with vital Class V resupply. However, the lethality and versatility of the MP bode well for their employment, and two MP platoons are available to support the brigade air assault as the division's center of gravity.

7-26. When possible, habitually aligned platoons remain with their brigades, and corps assets perform GS missions. However, when no corps assets are available and two division platoons are employed as stated above, the two remaining platoons conduct division EPW collection-point operations and other MP functions based on METT-TC. Normally, the EPW platoon and the MP company headquarters colocate in the DSA. As required (and based on METT-TC), airflow planning includes EPW/CI evacuation from the AATF/ FOB collection point back to the DSA. The PM section operates from the division rear CP to facilitate I/R operations and to coordinate MMS and AS with key logistical staff. Due to potentially extreme distances on the air-assault battlefield, the DPM normally locates with the division main CP to serve as a key G3 battle-staff member and to coordinate PIO with the G2.

SUPPORT TO DIVISION XXI (HEAVY DIVISION)

7-27. Division XXI represents a significant change in the manner in which division operations are conducted. These changes are brought on by information-age capabilities; an increased integration of service components into an effective battle team; more lethal, survivable, and agile systems; and more capable soldiers and leaders. The Division XXI operates in a larger battle space and at a higher tempo than the AOE division. The division is evolutionary in design, but revolutionary in its use of information technology. It improves the Army's deployability while enhancing its ability to dominate in decisive fights. The following are characteristics of the Division XXI operational environment:

- **Multidimensional.** The division will operate in an extended battle space that goes beyond the traditional physical dimension of width, depth, and height. It includes portions of the electromagnetic spectrum; and it extends beyond the physical boundaries of the division through its communication and digital connectivity to other Army, joint, and coalition elements, even reaching back to CONUS.
- **Precise.** Precision operations go beyond a precision strike to include every aspect of military operations from deployment through combat and through redeployment or transition to other operations. Precision in decisive operations is enabled by three emerging capabilities. First, digitization provides soldiers and leaders at each echelon the information required for making decisions. Second, a full suite of strategic, operational, and tactical sensors linked to analytical teams fuses combat information into situational awareness across the battle space. Third, simulations enable Army elements to be tailored and operations to be planned, war-gamed, and rehearsed—yielding precision execution.

- **Nonlinear.** Nonlinear operations do not seek a battle-space grid of close, deep, and rear operations. Instead, the battle space is fluid, changing as METT-TC changes through the duration of mission preparation and execution. Another dimension of this characteristic is the synchronization of near-simultaneous operations to achieve nonlinear effects across the battle space.
- **Distributed.** Division operations are distributed or executed where and when required to achieve decisive effects concentrated at a decisive point. Dispersion empowers subordinates to operate independently within the commander's intent, leading to synergistic effects that exceed the effects of a centralized headquarters.
- **Simultaneous.** The concept of decentralization operations that are multidimensional, precise, distributed, and nonlinear yields the capability to conduct simultaneous operations across the battle space. Simultaneous operations seize the initiative and present the enemy leadership with multiple crises and no effective responses. Rather than a single, concentrated attack, the division executes a series of attacks (lethal and nonlethal) as simultaneously as possible.
- **Integrated.** Division operations are fully integrated with joint, multinational, and nongovernmental partners. Integrated operations enable the Army to leverage the full suite of capabilities that the services bring to the battle space.

7-28. The Division XXI heavy division is one of total integration—not rounding up or down. Reserve-component soldiers assigned to the division are an integral part of the division mission and task accomplishment. The division cannot operate without them. The division is focused on massing effects on the enemy—enabled by a new foundation of information technology and distributed logistics. The division is built around the pattern of "conduct decisive operations," accomplished by either fires or maneuver. The design performs complementary battle-space shaping in concert with the overall corps plan. Its long-range assets are not typically held in reserve nor just employed in the close fight; they are used to best support the corps and division commanders' plans of operations.

7-29. Although the basic structure of the division has not changed—three maneuver brigades, a division artillery, and a DISCOM—the internal structure and operational construction have changed in a near revolutionary way. The C^2 structure and the basic organizational structure are very similar to the divisions discussed above. However, by integrating the capabilities of digital technology and by using enhanced situational awareness, it is better able to execute combat operations.

7-30. The maneuver brigades have their own scouts—a brigade reconnaissance troop (BRT); therefore, they no longer rely exclusively on the battalion scouts. The maneuver battalions are reduced to three companies with a total number of 45 combat platforms. The division artillery has three Multiple-Launch Rocket System (MLRS) batteries per battalion. The cavalry squadron is under the aviation brigade's C^2 but retains and performs the division's traditional cavalry mission. Figure 7-1 depicts the organizational structure of Division XXI.

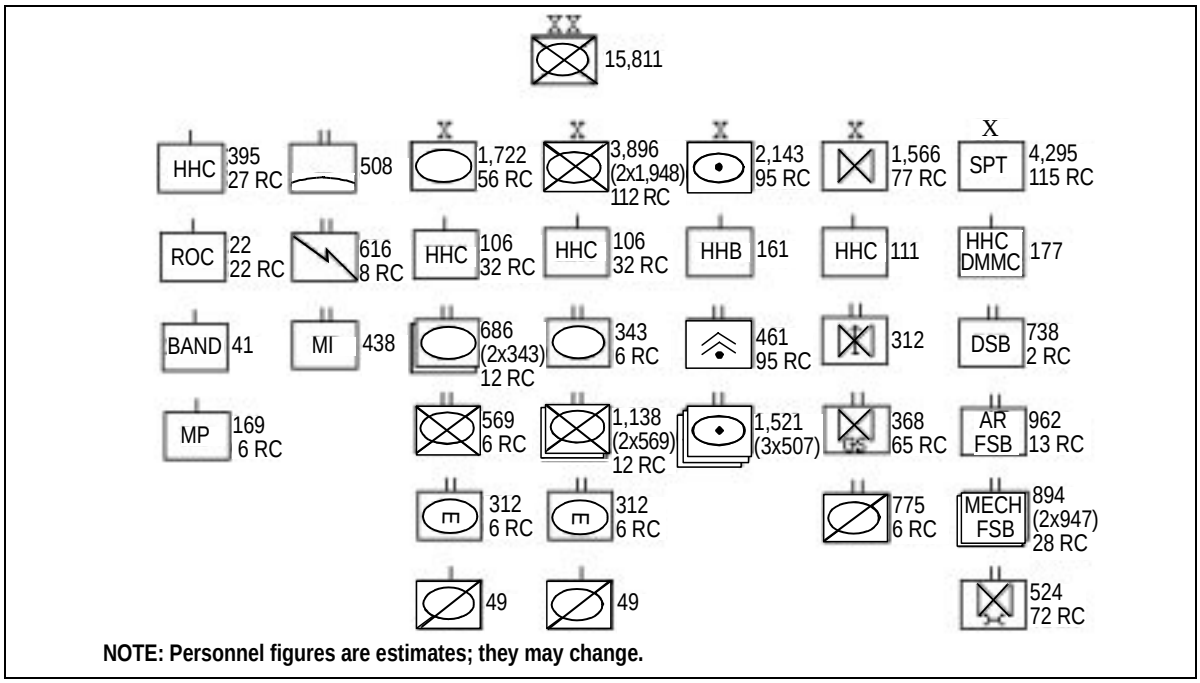

Figure 7-1. Division XXI Structure

7-31. The division's CSS is centralized. Instead of each unit having its own organic CSS personnel, they are now centralized in CSS units. The CSS assets are reorganized and reassigned to the DISCOM. Forward-support companies (FSCs) are habitually associated with each maneuver battalion and forward-support battalions (FSBs) will support each maneuver brigade. This operational structure enables distribution-based rather than supply-based logistics concepts to support the division. The overall logistics footprint for the division is now reduced and the division has organic self-sufficiency to operate unsupported for up to 30 hours.

7-32. A major difference between the AOE fix-forward doctrine and the Division XXI maintenance support is the change in the actual repair site. Division XXI maintenance units directly supporting a given customer will diagnose faults and will replace components forward in the battlefield and will repair rearward. Units will be manned with maintenance personnel capable of performing DS and limited GS maintenance.

7-33. The division operates in a battle space two and a half times larger than an AOE division, and it will usually fight as part of a corps or a JTF. The division conducts offensive, defensive, stability, and support operations in cooperation with other elements of the corps/JTF to gain tactical or operational results significant to the joint-force commander's campaign goals.

7-34. Although the division is a heavy division, MP support is somewhat different from that of an AOE heavy division. The PM (based on METT-TC) establishes operations where MP assets can best be commanded. At the same time, overall MP operations can be synchronized to support operations within

the division rear and the division commander's intent can be effectively supported. To this end, the PM conducts split-cell operations within the division main CP. Normally, the PM section is distributed between the security-operations cell (SOC) and the mobility/survivability (M/S) cell. The DPM (who works out of the M/S cell) is also part of the division planning team. He ensures that MP operations are integrated into division plans according to the PM's intent. The DPM attends coordination meetings and assumes coordination responsibility with the rest of the division staff when the PM relocates away from the division main CP.

7-35. The PM, as a staff officer, is involved with every aspect of planning and with the military decision-making process (MDMP). He uses the Force XXI Battle Command—Brigade and Below (FBCB2) C^2 system to understand the battlefield. He understands the mission and the commander's intent and priorities. The PM has complete situational awareness, establishes an effective staff relationship with the G3, and recommends the best way to employ MP resources.

7-36. The Division XXI heavy division MP company has five platoons. Although tasked-organized based on METT-TC and the commander's needs, three MP platoons provide DS for each maneuver brigade. The DS platoon requires a minimum of three squads (each having three teams) to accomplish the mission. The other MP platoons are normally employed forward in sector, providing AS and force protection for the division main and tactical (TAC) CPs and for other HVAs in the vicinity of the maneuver brigade rear boundary. As with the AOE heavy division, the Division XXI heavy division requires augmentation with at least one corps MP company for CS missions in the DRA and can expect two companies in a mature theater (based on METT-TC) as the main effort. In addition, the division may request an MP battalion headquarters to command and control CS MP operations in the rear or to conduct TCF operations.

7-37. While the division MP company is capable of performing all five MP functions, it must be augmented by the corps MP to fully perform all of these functions throughout a mature division's battle space. The PM prioritizes MP functions (based on the supported commander's needs), conducts a mission analysis, and requests needed corps assets through the division G3. Corps MP companies, L&O detachments, and CID assets are needed for sustainment operations. When corps MP companies and L&O detachments are attached to the division, they are placed under OPCON of the PM. The PM will then assign an AO and missions based on METT-TC.

7-38. The PM supports the division's distribution-based logistics concept by conducting aggressive R&S operations that secure the LOC. Since the main effort is to secure the LOC, traditional MMS missions (such as convoy security and escorts) are performed by exception. Through the allocation of increased MP to conduct LOC R&S operations aggressively, the division is able to detect and destroy threat forces before they interrupt operations in rear-area or sustainment operations.

7-39. Digitization gives the division the situational awareness that allows it to cover much larger distances and to move much faster. The systems that

provide this digitization are generally unprotected HVAs on the battlefield, which require aggressive AS and force-protection operations.

7-40. The EPW operations are much more fluid, sometimes requiring the division GS MP to move forward and assume brigade collection points, thus allowing DS platoons to move forward with their brigades. Similarly, corps MP may be required to move forward and assume the division's central collection points as the division's rear boundary is pushed forward to shorten the LOC.

7-41. As with all AOE divisions, until corps L&O and CID detachments augment the division, L&O operations are on an exception basis. The MP collect intelligence during every facet of mission execution. The PM develops police intelligence in the division main CP through coordination with the SOC, the G2, the Assistant Chief of Staff, G5 (Civil Affairs) (G5), and the Assistant Chief of Staff, G6 (Communications) (G6).

Chapter 8

Separate Brigades and Initial/Interim Brigade Combat Teams

The MP support separate brigades and IBCTs designed to provide the brigade commander with MP assets that can serve as a force multiplier and that can be employed as an economy of force. The brigade MP platoon is as lethal, flexible, and capable as any other platoon in the MP Corps.

USAMPS

The Army uses separate brigades to inject a small but powerful force where it is needed. It must be able to fight and win while operating on its own for a sustained period of time. It must be able to defend itself on a 360-degree front in war or MOOTW. While there are some variations of separate brigades, it is the heavy separate brigade that is most commonly found within the force.

OVERVIEW

8-1. The Army's IBCT is a full-spectrum, wheeled combat force. It is employed in all operational environments against all projected future threats. However, it is designed and optimized primarily for employment in small-scale contingency operations in complex and urban terrain, confronting low-end and midrange threats that may employ both conventional and asymmetric capabilities. The IBCT deploys very rapidly, executes early entry, and conducts effective combat operations immediately on arrival to prevent, contain, stabilize, or resolve a conflict through shaping and decisive operations. The IBCT participates in war (with augmentation) as a subordinate maneuver component within a division or a corps and in a variety of possible roles. The IBCT also participates (with appropriate augmentation) in stability and support operations as an initial-entry force or as a guarantor to provide security for stability forces by means of its extensive capabilities.

SUPPORT TO SEPARATE BRIGADES

8-2. MP support to separate brigades is provided by a four-squad MP platoon organic to the brigade HHC. A separate PM cell within the brigade HHC serves as the C^2 element for the platoon (see Figure 8-1, page 8-2). Support to the platoon and the PM section for maintenance, supply, mess, and communications is provided by the brigade HHC. Since the platoon and PM section have no organic support, the MP leadership must perform close coordination for this support. However, the MP platoon must compete with other brigade HHC assets for priority of repair for weapons, vehicles, and communications equipment.

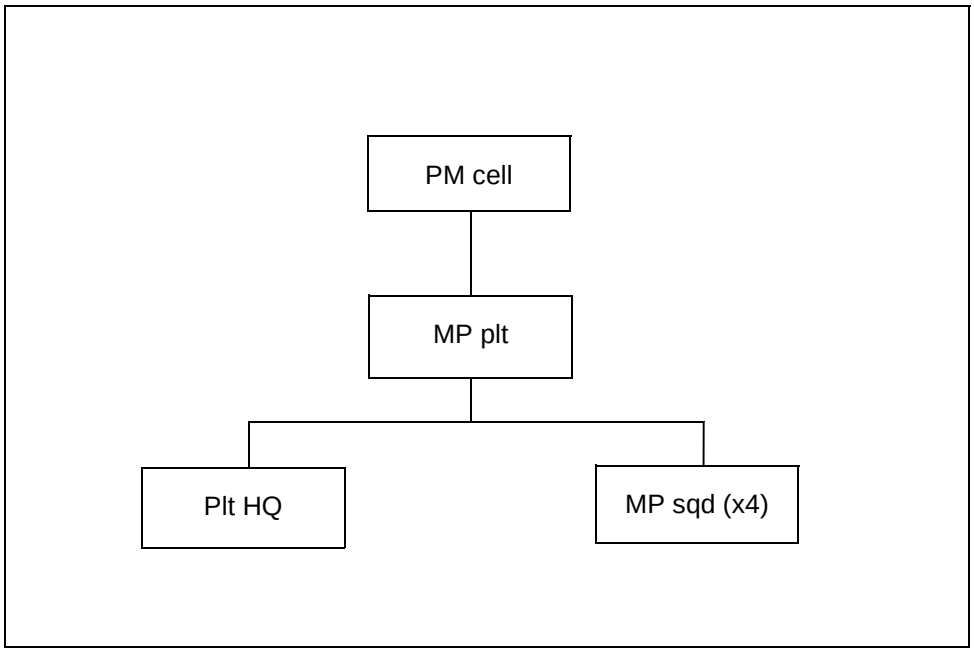

Figure 8-1. MP Support to a Separate Brigade

8-3. The C^2 of an MP unit supporting separate brigades also extends down from the tactical commander. The separate brigade PM has OPCON of brigade MP assets the same way the division PM has OPCON of division MP assets. This includes any MP assets that may have been provided from the corps. The PM advises the commander of a separate brigade on matters pertaining to MP operations. The platoon leader directs the execution of his platoon's mission based on the priorities set forth by the PM and the supported commander. Since the separate brigade's organic MP platoon is more robust than an MP platoon supporting a division maneuver brigade, METT-TC will determine the requirement for augmentation. However, corps L&O and CID augmentation is required.

8-4. The separate brigade's MP platoon is capable of performing all five MP functions. However, its resources are quite limited. Although the MP squads are employed according to METT-TC, the platoon supporting the separate brigade may have—

- One squad operating in the EPW collection point.
- One squad providing a mobile security screen and providing AS around the brigade's main CP.
- Two squads conducting MMS and AS throughout the brigade's rear area.

SUPPORT TO THE INITIAL/INTERIM BRIGADE COMBAT TEAM

8-5. The IBCT is a divisional brigade. It is designed to optimize its organizational effectiveness and to balance the traditional domains of lethality, mobility, and survivability with the domains required for responsiveness, deployability, sustainability, and a reduced in-theater

footprint. Its two core qualities are its high mobility (strategic, operational, and tactical) and its ability to achieve decisive action through a dismounted infantry assault. The major fighting components are its motorized infantry battalions. The IBCT has a unique reconnaissance, surveillance, and target acquisition (RSTA) squadron to enhance situational understanding.

8-6. To achieve a rapid deployment threshold, the brigade's design capitalizes on the widespread use of common vehicular platforms—particularly a highly mobile, medium-weight, combat/CS platform coupled with the minimization of the personnel and logistical footprint on theater. Encompassing a personnel strength of about 3,500 and preconfigured in ready-to-fight combined-arms packages, the entire IBCT can deploy within 96 hours of "first aircraft wheels up" and begin operations immediately upon arrival at the APOD. In essence, the APOD is the TAA. The IBCT cannot conduct forced-entry operations, but it provides the JFC with an improved capability to arrive immediately behind forced-entry forces and begin operations to shape the battle space and to execute decisive action to expedite decisions. Once committed, the IBCT can sustain operations for up to 180 days without relief.

8-7. The IBCT's organization is expandable either through augmentation or scalability (according to METT-TC) in any given contingency. The IBCT is scalable in terms of its ability to accept like-type additional forces to expand core tasks and functions already resident within the IBCT (for example, adding additional infantry or RSTA organizations). The IBCT is also capable of accepting augmentation consisting of units or elements that execute tasks or functions not resident within the IBCT (for example, adding armor, air-defense, MP, or aviation assets). In both cases, added units execute their normal mission-essential task list (METL) tasks and, therefore, will not require extensive training to deploy and operate with the IBCT. In both cases, the IBCT includes the command, control, and communications (C^3) capabilities necessary to permit the rapid integration of additional enabling capabilities, particularly for operations outside the scope of small-scale contingency operations (such as stability operations, support operations, and war).

8-8. The IBCT organization excludes other unit-based capabilities often provided in a division slice. However, for each missing capability, the brigade headquarters includes staff cells capable of conducting rudimentary planning and analyses to ensure that all functional-area considerations are incorporated in route planning and preparation for operations. The first MP elements in support of the IBCT are at the brigade headquarters level.

8-9. The MP planning cell is composed of a two-person (a major [MAJ] and a sergeant first class [SFC]) planning cell located within the HHC's maneuver-support cell and under the direct staff supervision of the brigade S3. The role of the MP planning cell is significantly different from that of a traditional division PM or a separate brigade PM. The main difference is in the IBCT's lack of organic or habitual MP assets. However, the absence of organic MP assets makes the job of the MP planning cell that much more critical. The MP planning cell must—

- Understand the organization, capabilities, and limitations of the IBCT.

- Conduct effective liaison with higher headquarters PM elements.
- Become an effective planner and anticipator of MP requirements.
- Prepare MP staff estimates and employment recommendations.
- Plan for MP deployment via air, sea, rail, or land.
- Task-organize MP units effectively and efficiently.
- Assume C^2 of incoming MP forces or, if operating under a division or corps, relinquish C^2 to the division/corps PM or battalion commander (if appropriate for effective employment of MP forces).

8-10. Depending on METT-TC, the brigade may be augmented by MP elements ranging from a platoon to a battalion. In any case, the MP planning cell then becomes a staff planner and coordinator of functional matters pertaining to—

- Force protection, physical security, and vulnerability countermeasures.
- Operations for collecting, processing, and evacuating (possibly) EPWs, CIs, and detainees.
- US military prisoner operations.
- Operations for processing and controlling dislocated civilians and refugees.
- Customs and counterdrug operations.
- Criminal investigations and CID-/MP-investigator support.
- PIO and establishing links with HN police agencies and other international/interagency law-enforcement agencies.
- MMS, AS, and L&O operations.
- Coordination of MP or CID division/echelons above division (EAD) augmentation forces, MWD teams (explosives, narcotics, and patrol), L&O detachments, and MP I/R units through the division, corps, and major Army command (MACOM) PMs.
- Training guidance to other US forces required to perform MP functions in the absence of MP forces.

8-11. Since the IBCT is a divisional brigade, the division PM and the IBCT MP planning cell play an important role in developing an optimum MP force package to support the brigade commander's concept of operations. Despite the brigade's early-entry timelines, the MP planning cell must consider and plan for MP augmentation forces as early as possible to free valuable combat resources. Small-scale contingency operations that result in numerous EPWs, civilian detainees, and refugees will hamper momentum and freedom of maneuver.

8-12. Once the initial brigade receives MP augmentation (see Figure 8-2), the MP priority of effort during the offense will focus on ensuring that routes remain unencumbered and secure for movement of ground combat, CS, and CSS forces. The MP's priority of effort during the defense will focus on conducting AS and counterreconnaissance along the LOC, C^2 centers, and CSS bases. The MP may conduct response-force operations or become part of the TCF.

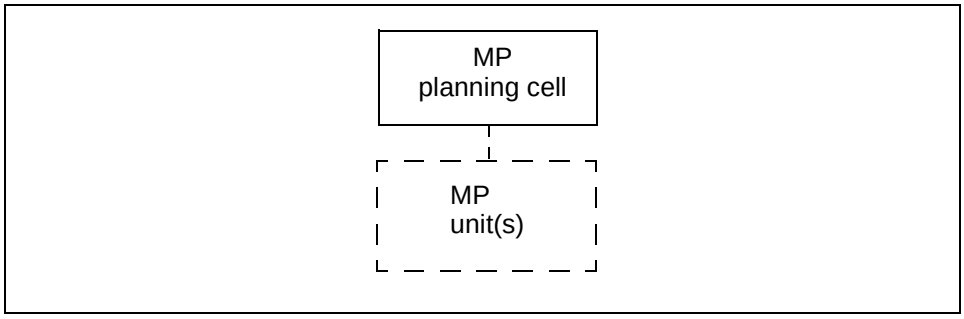

Figure 8-2. MP Support to the IBCT

8-13. Stability and support operations present some unique challenges. The IBCT may be deployed to a geographical area that is politically unstable, that lacks civil control, or that is in complete turmoil. The MP planning cell plans for and coordinates MP support according to available resources and the supported commander's needs. In this scenario (and based on METT-TC), an MP battalion TF could be required to deal with the challenges of—

- A significant number of refugees or dislocated civilians.
- AS or force-protection issues.
- MMS operations.
- Black-market and criminal investigations.
- Restoration of order.
- Civil unrest.
- Intervention of private and nongovernmental organizations.

Chapter 9

The United States Army Criminal Investigation Command

The history of the USACIDC goes back to World War I, when General John J. Pershing organized the CID in France. Today, the USACIDC is the Army's sole agent responsible for investigating felony crimes on and off the battlefield. The USACIDC provides investigative support to commanders at all echelons.

USACIDC

The USACIDC investigates offenses committed against US forces or property, or those committed by military personnel or civilians serving with US forces or where there is a military interest. The USACIDC agents investigate violations of international agreements on land warfare. They conduct special investigations at the direction of the USACIDC's commanding general (CG) or a higher authority. In general, the USACIDC's missions include—

- Investigating and deterring serious crimes.
- Conducting sensitive/serious investigations.
- Collecting, analyzing, processing, and disseminating criminal intelligence (CRIMINTEL).
- Conducting protective-service operations for designated personnel.
- Providing forensic-laboratory support.
- Maintaining Army criminal records.
- Enhancing the commander's crime-prevention and force-protection programs.
- Performing LOGSEC operations.

OVERVIEW

9-1. The USACIDC's operations help the commander maintain discipline and order by preventing or investigating crimes that reduce a unit's ability to fight. During the investigation of serious crimes, the USACIDC concentrates its efforts on investigating serious crimes such as wrongful deaths, controlled-substance offenses, theft, fraud, sex crimes, and assaults. The USACIDC also conducts sensitive and special investigations involving matters pertaining to senior Army officials and those associated with classified programs.

9-2. The USACIDC agents collect, analyze, process, and disseminate criminal intelligence/information relating to crime within or directed toward the Army. Specific information relating to modus operandi, crime techniques, investigative leads, gang violence, and terrorism is shared with the

appropriate intelligence and law-enforcement agencies. Conversely, USACIDC agents solicit and receive crime-related information from the MP and from local, national, and foreign law-enforcement and intelligence agencies. Special agents identify and evaluate crime-conducive conditions and indicators of potential attacks against Army property, facilities, or personnel. They then provide reports to the appropriate commander.

COMMAND AND CONTROL

9-3. The USACIDC is a centralized (stovepipe) MACOM whose special agents in the field report through the USACIDC's chain of command (detachment to battalion to group) to the CG, who in turn reports directly to the Army Chief of Staff and the Secretary of the Army (see Figure 9-1).

9-4. As an independent MACOM, the USACIDC's tactical units are not under the C^2 of supported organizations. The USACIDC's elements may be temporarily attached to a supported commander when required to accomplish a nonstandard mission. Reassignment, promotion, accreditation, and disciplinary actions are retained by the USACIDC. Attachments will be coordinated with the appropriate USACIDC headquarters planning the specific mission and approved by the CG, USACIDC. Additionally, although there is no formal staff relationship, USACIDC commanders advise their supported commanders on criminal-investigation matters. This enhances the quality, reliability of information, support, and trust between USACIDC elements and their supported commanders.

WARTIME SUPPORT

9-5. The USACIDC supports each echelon of command from the division to the ASCC. The theater USACIDC structure is comprised of a C^2 headquarters

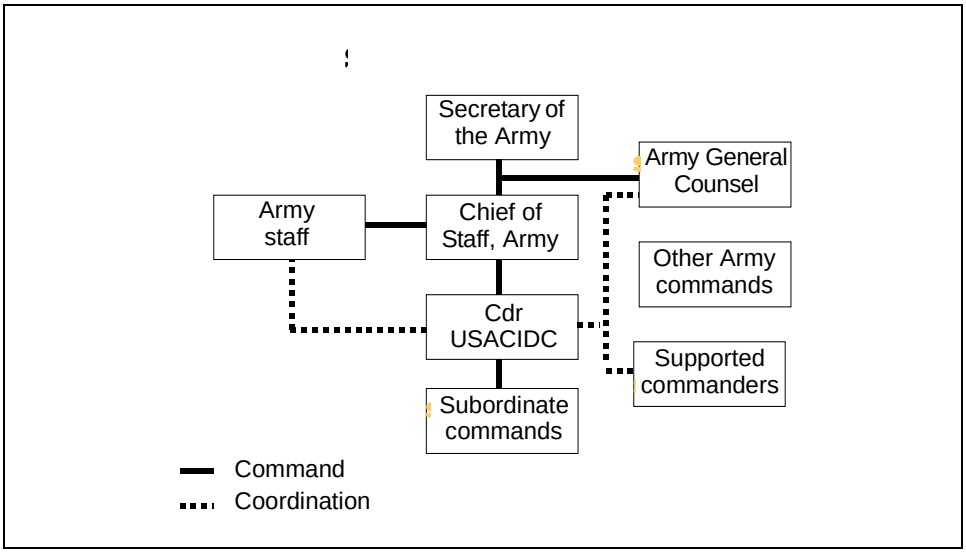

Figure 9-1. USACIDC Chain of Command

and mobile, modular, and tailorable investigative detachments. The USACIDC supports combatant commanders with the following functions:

- **LOGSEC.** Tracking and protecting materials and equipment from the manufacturer to the soldier on the battlefield.
- **CRIMINTEL.** Collecting, consolidating, analyzing, and disseminating intelligence associated with criminal and terrorists activities targeted at Army interests.
- **Criminal investigations.** Investigating war crimes and, in some cases, crimes against coalition forces and HN personnel.
- **Protective-service operations.** As in peacetime, protecting key personnel anywhere on the battlefield.

9-6. The USACIDC's LOGSEC function protects the Army's supply pipeline against criminal activities from the manufacturer, through logistics channels, all the way to the frontline soldier. It involves preventing, detecting, and investigating criminal and terrorist activities such as supply diversion, destruction, and sabotage or product substitution. The USACIDC's LOGSEC operations assess LOGSEC, identify weaknesses, and provide a prioritization of threats so that commanders can implement preventive measures to reduce the vulnerability of the logistics pipeline. Whenever possible, the USACIDC will initiate actions to recover logistical losses and return them to Army control.

The Army let a $22 million contract for the manufacture of its mobile kitchen trailer (MKT)-90 mobile field kitchens in 1990. These kitchens were distributed to Army units worldwide, including those units serving in Saudi Arabia during Operation Desert Shield/Desert Storm. After distribution of the MKT was well underway, a US government quality-assurance representative received information from the manufacturer's employees indicating that the kitchens were not built to contract specifications. This information led to an investigation by the USACIDC's major fraud procurement unit (MFPU). The investigation revealed that inferior material and manufacturing processes were substituted, which allowed the contractor to realize an additional $228,000 in profit. The US Army Environmental Hygiene Agency determined that the MKT-90 had serious sanitation defects and posed a safety hazard to troops using and being fed from these kitchens. The problem with the MKT was identified and expeditiously resolved to ensure the safety of soldiers in the field. The primary subject was indicted by a grand jury and subsequently pled guilty to one count of major fraud. He was found guilty, sentenced to 10 months confinement, and ordered to pay restitution.

9-7. The USACIDC's CRIMINTEL collection efforts focus on the identification and prevention of terrorist and nonterrorist crimes against US and allied military personnel, facilities, and other interests. Upon collecting this information, agents recommend countermeasures to combat subversive activities through coordination with MI, the PM, rear-area operations officers, and HN military and civil intelligence agencies. Additionally, when directed, the USACIDC becomes the lead US military investigative agency at theater

level. When this happens, it is tasked with leading the prevention-of-terrorism effort from all services, not just the Army component.

The MI analysts, the MP, and US Army criminal investigators deployed in Kosovo formed a combined all-source information center. This center provided threat assessments to units assigned to TF Falcon. Fifty-five percent of these assessments referenced some form of criminal activity. These intelligence products provided commanders with reliable information concerning potential incidents or criminal activity. With nearly 7,000 US soldiers deployed within the region, these assessments were absolutely crucial for the force-protection planning effort.

The fusion cell within the information center developed intelligence products from national, theater, and operational sources. Due to the significant threat posed by criminal elements in the region, two CID military agents and two CID civilian analysts were attached to the fusion cell to facilitate the police-intelligence function. The CID personnel, in cooperation with MP soldiers, played a key role by linking CRIMINTEL to specific groups and events. The CRIMINTEL collection effort was specifically targeted on weapons, drugs, organized crime, and the identification of smuggling routes. The identification of smuggling routes resulted in a significant increase in the number of weapons being confiscated. The timely transfer of CRIMINTEL products to tactical units enabled a rapid response to serious confrontations, increased confiscation of arms and ammunition, and improved stability in TF Falcon's AO.

9-8. During war and MOOTW, the criminal-investigation effort includes—

- War crimes and, when directed, crimes against coalition forces and HN personnel.
- Major felony crimes committed by US personnel or EPWs/CIs and, when directed, crimes committed by foreign nationals in which there is an Army interest.
- Criminal acts by indigenous personnel, factions, and ad hoc groups.
- Special/sensitive investigations, hostage negotiations, polygraph operations, and force-protection operations.
- CRIMINTEL operations.

9-9. The USACIDC detachments provide enhanced coverage and protection for designated key and essential leaders during war and MOOTW. The protection requirement for senior JTFs and Army commanders may be significantly greater during MOOTW than during peacetime or war as the propensity of asymmetrical threats (such as criminal and terrorist groups) operating in the AO also increases.

ORGANIZATION

9-10. The USACIDC is organized with an array of multifunctional units. As with many other Army organizations, its force is in a transition process. During peacetime, the USACIDC groups provide brigade-level area support for worldwide Army operations. The group provides C^2, staff planning, and administrative support for USACIDC elements assigned to an AOR or

deployed to a contingency operation. During war, a group provides the same capabilities in support of an ASCC and provides C^2 for all USACIDC units in the theater. Regardless of the operational environment, the group ensures the connectivity between all USACIDC units. It establishes and maintains links with supported units and interagency, joint, multinational, allied, and HN authorities on matters pertaining to Army and USACIDC operations. The group headquarters has a command section, a detachment headquarters, an S1, an S2, an S3, an S4, an SJA, and a communications section. It provides C^2 for up to six subordinate battalions. Major differences in the AOE and Force XXI groups are in an increase of support and mission personnel and the movement of all polygraph support down to battalion level.

9-11. During peacetime, the USACIDC battalions provide area support for worldwide Army operations. They provide C^2, staff planning, forensic-science support, CRIMINTEL, polygraph support, technical guidance and supervision of USACIDC operations, and administrative support for USACIDC elements assigned to an AOR or deployed to a contingency operation. During war, the USACIDC battalion provides the same capabilities in support of each corps and TSC. Under AOE designs, one battalion supports each corps and TSC. Under the Force XXI design, up to two battalions support each TSC. Like the groups, each USACIDC battalion ensures connectivity and establishes and maintains links with other units/agencies within its AOR. The battalion headquarters consists of a command section, a detachment headquarters, an S1, an S2, an S3, an S4, and a communications section. It provides C^2 to five USACIDC detachments on a sustained basis. Its span of control can accommodate up to seven detachments for a short period of time. Major differences in the new battalion are the addition of a CSM, an S6 officer, a detachment commander and support personnel, and CRIMINTEL and forensic personnel.

9-12. The USACIDC investigative team is the smallest operational investigative element. Each team consists of two special agents (a warrant officer and a noncommissioned officer [NCO]). METT-TC requirements dictate that these teams have the capability to operate independently from the detachment headquarters. The investigative teams are the building block for both AOE and Force XXI USACIDC detachments. Both designs provide levels of flexibility to task-organize without splitting units apart. The detachment (with its complement of teams) performs the full range of criminal-investigative functions in all operational environments, but it has limited CRIMINTEL and LOGSEC management capabilities and no forensic or polygraph capability. Each detachment includes a headquarters section and up to eight investigative teams. METT-TC requirements dictate that these teams have the capability to operate independently from the detachment headquarters. The major differences between the AOE and Force XXI detachments' design begin with replacing the heavy and light division support elements (DSEs), the corps-area support element (CASE), the TSC-area support element, (TASE), and the port-area support element (PASE) designs with a modular design consisting of a standardized headquarters element and two special-agent sections. Each section consists of four investigative teams. Personnel administration, supply, and the bulk of administrative support found in the AOE organizations have been consolidated at battalion.

Additionally, the Force XXI detachment is commanded by a special-agent warrant officer.

9-13. Both the AOE and the Force XXI units retain the Army's standard dependencies upon other units for support requirements (religious, health services, finance, photographic processing, and so forth). The new USACIDC TOEs have enhanced A/L support capabilities. However, the new units still retain the AOE support requirement for food services and emergency Class III/V resupply from CS MP brigades, battalions, and companies.

THE FIELD INVESTIGATIVE UNIT

9-14. Sensitive investigations are normally conducted by the field investigative unit (FIU). The FIU is a one-of-a-kind organization within the DOD that enables the Secretary of the Army to conduct sensitive investigations requiring access to special information or programs that are highly classified. The FIU works closely with the Army IG, the Judge Advocate General of the Army, and the Army General Counsel to support commanders in the special-operations and intelligence communities and in the area of classified acquisition programs. The FIU may also be assigned investigations involving senior Army personnel or those of special interest to the Army leadership.

THE COMPUTER-CRIME INVESTIGATION UNIT

9-15. The computer-crime investigative unit (CCIU) deals with intrusions involving classified networks or multijurisdictional offenses. The CCIU works closely with MI and federal law-enforcement agencies to coordinate military actions, nonmilitary-affiliated offenders, and foreign-intelligence services. In addition, it provides technical assistance to CID elements that are conducting computer-related investigations.

THE PROTECTIVE-SERVICE UNIT

9-16. The protective-service unit (PSU) provides worldwide protective services to designated personnel to protect them from assassination, kidnapping, injury, or embarrassment. The PSU plans, coordinates, and executes executive protection for—

- The Secretary of Defense.
- The Deputy Secretary of Defense.
- The Chairman of the Joint Chiefs of Staff.
- The Vice Chairman of the Joint Chiefs of Staff.
- The Secretary of the Army.
- The Army Chief of Staff.
- The Army Vice Chief of Staff.
- Others (as directed).

9-17. During war and MOOTW, the USACIDC routinely provides protective-service support to senior Army ground commanders and, in some cases, to JTF commanders. The USACIDC agents also provide training to the MP details providing protective services to senior field commanders.

The President of the US hosted the North Atlantic Treaty Organization's (NATO's) 50th summit anniversary celebration in Washington, DC during the period of 22 to 26 April 1999. The President invited 28 heads of state or prime ministers, 48 foreign ministers, 88 ministers and chiefs of defense, and the chairman of the military committee to the summit. During the conference, the principal guests resided in 23 hotels in Washington, DC. The responsibility for providing protection for the ministers, chiefs of defense, and the chairman for the military committee was given to the USACIDC's PSU. In preparation for this mission, additional training on protective-service operations and evasive driving techniques was given to over 200 reserve agents. These individual mobilization augmentees, troop program units, and other USACIDC agents were critical to the successful execution of this mission.

US ARMY CRIMINAL-INVESTIGATIONS LABORATORY

9-18. Forensic-laboratory support is provided by the US Army Criminal-Investigations Laboratory (USACIL) that is currently located at Fort Gillem, Georgia. The USACIL is a nationally accredited forensic laboratory that provides all three services with dedicated, highly responsive, deployable, state-of-the-art scientific and forensic investigative support. The six forensic divisions of the USACIL include the following:

- Chemistry (serology, drugs, trace, and deoxyribonucleic-acid [DNA] testing).
- Questioned documents (alterations and comparisons of handwriting, typing, and printing).
- Firearms and tool marks (weapons and obliterated numbers).
- Photography (evidence, charts and photos for court).
- Latent prints.
- Computer forensics.

9-19. The USACIL collects, receives, and examines evidence and prepares reports of findings. It also provides expert-witness testimony at court-martials.

US CRIME RECORDS CENTER

9-20. The US Crime Records Center (CRC) maintains the Army's criminal records. It maintains more than two million MP reports and USACIDC reports of investigations. These records are retained for at least 40 years before being destroyed. During their retention, the records are actively maintained and frequently researched.

During the course of an investigative search, civilian police authorities seized 19 hand grenades. A routine search of stolen property and criminal index files failed to identify the grenades as having been stolen from a nearby military installation. However, a search of the CRC files identified a USACIDC investigation relating to the theft of a case of grenades that occurred 20 years earlier. Further investigation revealed that the lot number of the recovered grenades was identical to that of the stolen grenades. The investigative leads resulting from the CRC file search contributed to the resolution of both cases.

9-21. The CRC conducts more than 10,000 criminal-history name checks each month to identify victims and perpetrators of criminal offenses. The checks are requested not only by USACIDC agents, but also by other military and civilian law-enforcement officials. The CRC is also the Army's agent for Freedom of Information Act (FOIA) and Privacy Act requests relating to criminal investigations and MP reports. The CRC also manages the Army's polygraph programs and their support to Army installations around the world.

EMPLOYMENT

9-22. Whenever possible, USACIDC units are colocated with the MP. This provides unified MP support across the battlefield, and it facilitates logistical support (primarily mess) provided by MP units. However, the USACIDC maintains its vertical C^2. Based on METT-TC, the MP group (CID) will colocate with the supported ASCC and the MP battalions (CID) supporting the corps and EAC will colocate with the MP brigade (CS). When feasible, MP detachments (CID) will colocate with MP battalions/companies and division MP companies. Figure 9-2 illustrates a typical battlefield array for AOE organizations, and Figure 9-3 illustrates a Force XXI array.

9-23. Since USACIDC detachments are austere organizations with little organic A/L capability, they rely on the battalion for unit-level maintenance, supply, and personnel support. However, detachments must often operate independently when performing criminal-investigation functions throughout the AOR. During these times of long-distance separation, detachments must seek A/L support from the supported unit.

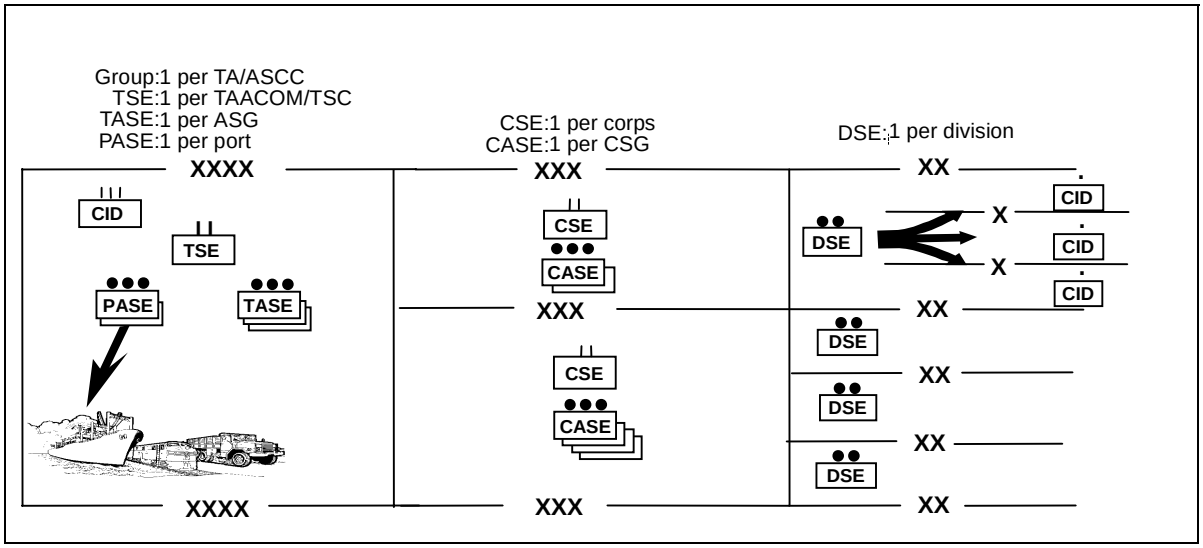

Figure 9-2. AOE Battlefield Array

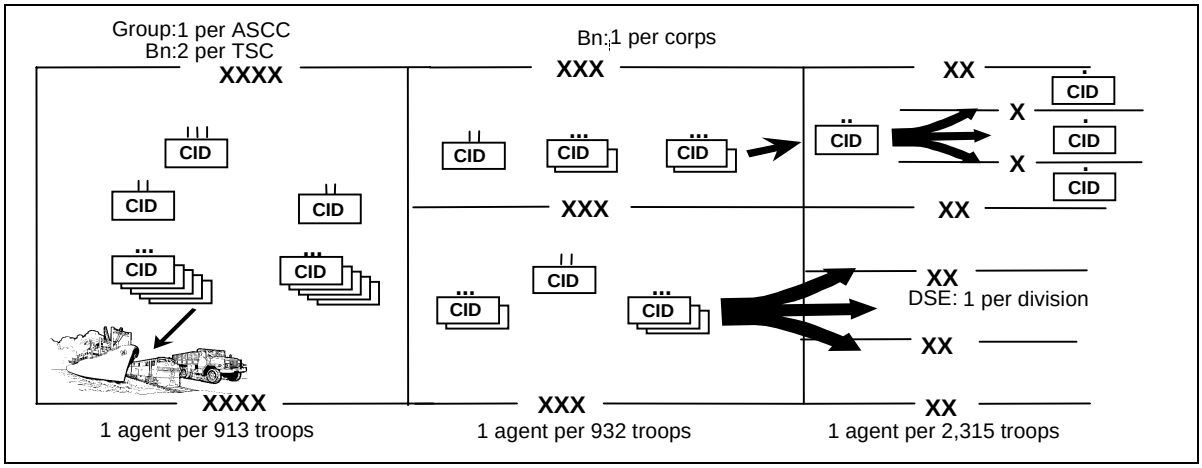

Figure 9-3. Force XXI Battlefield Array

Chapter 10

Offensive and Defensive Operations

The whole of military activity must relate directly or indirectly to the engagement. The end for which a soldier is recruited, clothed, armed, and trained; the whole object of his sleeping, eating, drinking, and marching is simply that he should fight at the right place and the right time.

Clausewitz

Army doctrine considers the full range of operations from war to MOOTW. An operation is a military action or the carrying out of a military mission needed to gain the objectives of any battle or campaign. Offensive and defensive operations normally dominate military operations in war and in some smaller-scale contingencies. An offensive operation is aimed at destroying or defeating the enemy and imposing our will on him for a decisive victory. Defensive operations defeat an enemy attack, buy time, economize forces, or develop conditions favorable for a counteroffensive that regains the initiative and defeats the enemy.

OVERVIEW

10-1. The offense is the decisive form of battle. Offensive campaigns and major operations are designed to achieve operational and strategic objectives quickly and decisively at the least cost. Offensive operations combine the terrain and the force to achieve the objective. The main purpose of the offense is to defeat, destroy, or neutralize the enemy force. Offensive operations are characterized by a rapid shift in the main effort to take advantage of opportunities by momentum and simultaneous destruction of enemy defenses.

10-2. The immediate purpose of defensive operations is to defeat an attack. Military forces defend only until they can gain sufficient strength to attack. Commanders choose to defend when they need to buy time, to hold a piece of terrain, to facilitate other operations, or to erode enemy resources at a rapid rate while reinforcing friendly operations. The ARFOR conduct defensive operations as part of major operations and campaigns and in combination with offensive operations (see FM 3-0).

SUPPORT TO OFFENSIVE OPERATIONS

10-3. MP support to offensive operations varies according to the type of operation being conducted. The MP functions support each echelon commander based on METT-TC. In the offense, MP priorities are often placed on MMS, I/R, and AS operations. Regardless of the offensive effort, MP leaders supporting an offensive operation must—

- Understand the commander's intent and his concept of operations.
- Anticipate that selective elements of the offensive force may need to pause, defend, resupply, or reconstitute while other forces attack.
- Anticipate changes in the operational tempo and prepare to weight the MP effort to meet the maneuver commander's intent.
- Provide MP support within the context of linear and nonlinear operations. They must understand how both types of operations affect the security of rear areas and LOC, the protection of C4I, the means of sustainment, and the land force's mobility.
- Support the maneuver commander's intelligence efforts by conducting the PIO function. The MP must observe, identify, and report information.
- Assist maneuver forces to mass. The MP protect C^2 nodes such as the CP that orchestrates the mass efforts and resources that sustain the offensive move. The MP must deny incursions by enemy reconnaissance forces into the AO. They also maintain surveillance, provide early warning, and impede and harass the enemy with supporting and organic fires.
- Speed the commitment of follow-on forces and reserves. They must also conduct MMS operations to assist the commander in a smooth and quick shift of forces to support the main effort.
- Anticipate the pursuit and exploitation by positioning MP forces that can support continuous operations. The MP support as far forward as possible while protecting resources needed to seize the opportunity. The EPWs/CIs are collected as far forward as possible. The MP coordinate the treatment of dislocated civilians and refugees with the HN or foreign forces.
- Tailor the MP support based on the unit being supported (corps, divisions, and brigades).
- Consider the location and composition of response forces and the TCF and the strength of rear-area threats.
- Integrate a force into the offensive plan that is capable of conducting aggressive combat operations against designated targets.

During Operation Just Cause, an MP platoon received the mission to disable an armed Panamanian Defense Force (PDF) patrol boat docked near a key objective. After receiving the mission, the platoon leader maneuvered his force into position and attacked after receiving enemy fire. The platoon successfully disabled the patrol boat and captured the objective while suffering minimum casualties.

10-4. During offensive operations, MP support provided by teams, squads, and platoons provide the commander with an agile, flexible, versatile, and capable force ready to contribute to the overall mission success.

SUPPORT TO DEFENSIVE OPERATIONS

10-5. The MP support defensive operations consistent with the commander's intent and priorities. They support a defending force by assisting subordinate elements in the execution of different, yet complementary actions. For example, the MP may support the maneuver of an attacking unit by conducting MMS operations while simultaneously providing AS for a defending unit in a base cluster. The MP support reflects the maneuver commander's focus—destroying an attacking force, retaining or denying key terrain, moving away from an enemy force, or a combination of the aforementioned. However, despite the intent of the defensive operation being conducted, MP leaders must—

- Conduct MMS operations to help a force maneuver and mass. The MP must anticipate the shift from the defense to the offense and assist the forward movement of reserves.
- Conduct AS operations to deny information to enemy reconnaissance elements seeking out the exact location of the defending force. The MP are positioned where they can control key terrain or improve the defensive capability of bases and base clusters. The MP conduct aggressive R&S to locate and deny enemy access to critical logistical facilities.
- Protect sustainment resources while supporting the lateral, forward, and rearward movement of forces.
- Consider the type and size of the AO, the LOC security, the rear threat, and the number of EPWs/CIs and dislocated civilians to determine how they may affect the movement of forces.

During Operation Desert Shield, EAC, corps, and division MP units conducted a myriad of missions to support both the XVIII Corps's (Airborne) and the VII Corps's movement to their TAA. The MP's main focus was on MMS and AS throughout the AO to ensure freedom of movement and to protect US and coalition forces against terrorists and other threats in the rear area.

10-6. The success of MP operations in the defense depends on the MP leader's situational awareness, the commander's intent, and the precise employment of MP resources when and where they are needed. In the defense, the MP perform their five functions to assist the defending commander by providing a lethal mobile force that allows him to concentrate his efforts and resources in fighting the next battle.

Chapter 11

Stability and Support Operations

ARFOR conduct stability operations in a complex, dynamic, and often asymmetric environment. Stability operations are usually nonlinear and noncontiguous. They are often time and manpower intensive. The purpose of support operations is to meet the immediate needs of designated groups for a limited time until civil authorities can accomplish these tasks without Army assistance.

FM 3-0

The Army's mission is to prepare for war and, when deterrence fails, to achieve a quick, decisive victory. The DOD projects that many of its future missions will be stability and support operations. However, these operations are not new to the Army. The Army has participated in stability and support operations in support of national interests throughout history. The Army has protected its citizens, assisted nations abroad, and served America in a variety of other missions. The pace, frequency, and variety of stability and support operations have quickened in the last three decades. As demonstrated in Operations Provide Comfort, Restore Democracy, and JTF Los Angeles, these types of operations present a challenge to all services.

OVERVIEW

11-1. Stability operations are conducted outside of the US and its territories to promote and protect US national interests by influencing political, civil, and military environments and by disrupting specific illegal activities. Stability operations may include both developmental and coercive actions. Developmental actions enhance a HN government's willingness and ability to care for its people. Coercive actions apply carefully prescribed limited force or the threat of forces to change the AO's environment.

11-2. Support operations provide essential supplies and services to relieve suffering and to help civil authorities prepare or respond to crises. In most cases, the ARFOR's efforts are focused on overcoming conditions created by man-made or natural disasters. The ultimate goal of support operations is to meet the immediate needs of designated groups (for a limited time) until civil authorities can accomplish these tasks without Army assistance.

11-3. Stability and support operations are distinctly different from offensive and defensive operations and must be analyzed differently. For instance, the application of the rules of engagement (ROE) will be unique to the operation. The restrictions on combat operations and the use of force must be understood and obeyed at all levels. MP leaders must clearly take the initiative and

ensure that the applicable guidance is implemented and followed by all subordinates.

11-4. Stability and support operations have more diverse political considerations than are usually encountered in war. There are also complexities that must be addressed in joint, combined, and interagency stability and support operations. The Army's challenge is to execute these operations successfully in a joint or combined arena without degrading its capability to wage war successfully.

11-5. If the US is to fight and win future wars, it must develop, train, and employ its force structure in a manner that ensures success in every operation across the spectrum of military operations. Under these auspices, MP forces can provide commanders with especially valuable assets for stability and support operations. The MP have the unique capability of serving as a combat, CS, and CSS force. The domestic and international acceptability of the MP operational image frequently makes the MP the most appropriate force for stability and support operations. Additionally, the MP are flexible and capable of rapidly transitioning from one end of the spectrum to the other if the environment changes.

FORCE SUITABILITY

11-6. The MP's capabilities and their operational and supporting tasks are as integral to stability and support operations as they are to offensive and defensive operations. MP branch-/core-related skills are highly compatible with the capabilities required for stability and support operations. The MP provide a highly capable, politically acceptable force that is suitable for a variety of missions. They possess robust moving, shooting, and communicating capabilities; and they project an assist, protect, and defend image that is particularly important when tailoring a force that requires significant capabilities but a low political profile. The MP provide a flexible, but limited, economy-of-force organization. Mission requirements will always exceed available MP resources, especially in stability and support operations. For this reason, MP assets must be prioritized to deliver the greatest mission capability. The specific operations that MP units perform at a given time are determined by the echelon commander's needs, the mission requirements, and the availability of MP resources. As discussed in previous chapters, the echelon commander, through the command's PM, sets the priorities for MP operations. As in offensive and defensive operations, the PM knows that while the MP force can perform all MP functions, they may not be robust enough to perform all assigned MP missions all of the time. The PM must continuously make trade-offs between the numbers and kinds of MP missions that can be supported.

11-7. The MP's capabilities are further enhanced by their training, mind-set, and experience in dealing with people in highly stressful and confusing situations. Although capable of conducting combat operations when needed, the MP are highly practiced in de-escalation and in employing the minimum-essential force to contain potentially violent situations. This mind-set serves as the framework for MP law-enforcement training and is especially applicable in MP support for stability and support operations. Furthermore,

this mind-set is exercised and reinforced daily in peacetime law-enforcement operations. This is a significant capability. MP soldiers learn and receive constant reinforcement training in controlling a situation on the spot before it escalates and cannot be controlled. The MP have a unique understanding of human nature and are adept at handling emotion-laden situations.

During operations in Kosovo, as both Serbs and Albanians attempted to create unfavorable conditions and responses by US forces, the MP kept their cool under fire in the streets of Gnjilane and Kamenica. The MP's reaction led to a quick understanding by all sides that the US Army MP were fair and just and understood the tense situations.

11-8. The MP stress four essential training competencies—skill proficiency, human dimension and attitude, camaraderie and teamwork, and leadership. These competencies are the foundation for all MP operational performances. They equip the MP to exercise discretion in dealing with others, to protect and assist those in need, and to accomplish the varying demands of MP missions in stability and support operations and, when needed, in war.

STABILITY AND SUPPORT

11-9. Stability and support operations are performed in support of US authorities or in support of international bodies and foreign governments when so required by US authorities. The MP have long provided the essential support for stability and support operations; however, the frequency of these operations has increased significantly in recent years. Consequently, the MP have been deployed in greater numbers with greater frequency. MP units have a substantial history of successful, simultaneous, and continuous deployments in both a lead and a support role.

SUPPORT TO DOMESTIC CIVIL AUTHORITY

11-10. The purpose of support to domestic civil authorities is to—

- Render humanitarian assistance.
- Provide disaster relief.
- Restore order.
- Combat terrorism.
- Support counterdrug operations.

11-11. Military operations supporting domestic civil authorities are governed by the provisions of the Stafford Act, the Posse Comitatus Act, and other laws and regulations. Peacetime experience in civil-military affairs equips the MP to oversee, assist, and train other units and agencies for law enforcement, sensitive security, and operations to control dislocated civilians (within the legal limits of a particular stability or support operation). For this reason, the MP are often needed after other forces have redeployed, and they stay until government order is restored. Since active-component military missions are constrained by the Posse Comitatus Act, nonfederalized national guard (NG) units are often employed to conduct these operations (particularly

counterdrug operations). The NG units can operate under gubernatorial authority within state jurisdiction without Posse Comitatus restrictions. The NG MP units are the only NG units trained, skilled, and experienced in providing law enforcement. They offer civilian authorities a unique, specialized capability not available from other NG units.

SUPPORT TO HUMANITARIAN ASSISTANCE AND DISASTER RELIEF

11-12. Humanitarian assistance and disaster-relief operations provide emergency assistance to victims of natural and man-made disasters and other endemic conditions. Natural disasters include earthquakes, floods, and hurricanes. Man-made disasters include riots and civil conflicts. Humanitarian assistance and disaster relief conducted by US forces alleviate urgent nonmilitary needs of a populace until the appropriate civilian agencies can provide the needed services without military support. These types of operations include, but are not limited to—

- Conducting searches and rescues.
- Evacuating, sheltering, sustaining, and protecting dislocated civilians.
- Making food, medical care and treatment, and other civilian-aid programs available.
- Reducing opportunities for criminal activity and restoring L&O.
- Maintaining other operations needed to ensure the well being of the affected population.
- Providing relief operations for man-made disasters. These operations are characterized by civil conflict, and they entail all of the requirements for other disasters but focus on the restoration of L&O.
- Providing force protection and security.

11-13. MP support can be an important asset in all disaster-relief operations. The MP are trained and equipped for decentralized operations. MP teams operate in highly mobile vehicles equipped with radios, which are invaluable in disaster-relief operations. Each MP platoon, company, and battalion headquarters is equipped with high-frequency radios. These capabilities allow the MP (even when widely dispersed) to maintain centralized communications; to provide L&O support; and to assist in search, rescue, and evacuation efforts. Because of their decentralized operations and communications equipment, the MP can also play a vital role in notification, ADC, and access and egress control. They can deploy with disaster-assessment teams to assist in advising and developing a disaster-assistance plan. The MP can also deploy to an affected area to—

- Assist in restoring order.
- Search for, rescue, and evacuate victims.
- Provide personnel and vehicular circulation controls.
- Provide ADC.
- Conduct detention operations.
- Provide physical and area security to protect life and property immediately following a disaster.
- Protect fire and emergency-services personnel.
- Gather, record, and report information.
- Provide force protection and security.

11-14. MP (I/R) battalions can support civil-affairs units by establishing I/R facilities to shelter, sustain, protect, and account for disaster-relief victims. These units can also train and assist government agencies (US and foreign) or police in the operation of facilities for dislocated civilians and detainees.

11-15. The MP possess capabilities critical to relief in man-made disasters characterized by civil conflict. The MP have the essential training and skills needed for relief operations that focus on restoring civil order. Restoration of civil order demands—

- **Objectivity and neutrality.** The objective of civil-disturbance control is to restore L&O, not to impose punishment or suppress peaceful dissent. Government forces quelling civil disorders must be emotionally objective and politically neutral. MP law-enforcement training stresses objectivity and neutrality, an important attribute for forces employed in stability or support operations.
- **Minimal use of force.** The application of more than minimum force may be detrimental to mission success. The MP are particularly suited for these situations, having been trained on the technique for the use and measured application of minimum forces to accomplish mission goals.
- **Public acceptance.** Government forces must avoid actions that will alienate the populace. Any action offensive to community sensitivities must be avoided. The MP receive training in crowd-control operations, interpersonal communications skills, and minimum use-of-force techniques—skills that are critical in gaining public acceptance.
- **Positive image.** In many disturbance operations, demonstrators and government forces compete for the approval and sympathy of the general population. The MP's assist-and-protect image provides the government with a distinct advantage in such situations.
- **Threat awareness.** Government forces must pay attention to and try to learn the organization, intentions, and activities of demonstrators. Equal attention must be paid to how the community will respond to the demonstrator's actions and the government's response. The MP interact daily with the populace, placing them in a position to develop criminal information and to determine the collective attitude of the populace.
- **Effective coordination.** Disturbance operations often involve many agencies from various levels of government. Thorough, timely, and coordinated preparation, planning, training, and execution are essential for mission success. MP civil-disturbance training (including planning and coordination measures) and their communications assets enhance coordination, particularly during mission execution.
- **Operational unity.** Multiple control forces representing different agencies with varying jurisdictional authority can pose C^2 problems. When unity of command cannot be achieved, operational unity must be achieved by colocating operational centers, integrating communications, and delineating organizational responsibilities. The MP are well trained in police and military operations, possessing a sound understanding of both civilian police and military measures, legal constraints, and effective coordination.

11-16. The MP operational tasks supporting man-made disasters vary according to the nature of the disaster and the operational environment. For example, in CONUS where the commitment of military forces to civil disturbances is considered a last resort and military involvement is limited by law, nonfederalized NG MP units have long been employed by civil authorities for their unique capabilities. MP forces can—

- Isolate and contain an area with barricades, roadblocks, and perimeter patrols. The MP can also assist civil-affairs units by enforcing pass and identification systems and public-utility controls.
- Provide mobile patrols to enhance the security of high-priority targets (such as buildings, utilities, and services that are critical to the community's economic and physical well being).
- Monitor, disperse, contain, or limit crowd movement through—
  - Observation points and patrols.
  - The communication of interest and intent to the crowd.
  - The channelization or diversion of the crowd.
  - Gaining the cooperation of the dissident leadership.
  - The proclamation of the illegal nature of the crowd's actions.
  - Show of force.
  - The use of crowd-control formations.
  - The apprehension of crowd members and leaders.
  - The application of minimum-force measures.
- Establish area control to prevent looting, to protect businesses and other likely targets, and to prevent arson. The MP accomplish this mission with saturation patrolling, including vehicle and foot patrols. With augmentation, the MP can perform air and water patrols. They also enforce populace control measures (such as ordinances to prevent gathering, permits to gather, restrictions on circulation, restrictions on the interference with government and public functions and personnel, restrictions on possessing weapons, and other measures instituted by civil authorities).
- Neutralize special threats (such as snipers and bombings) that are highly dangerous to both government forces and the community. Snipers pose a particularly grave danger in disaster-relief operations. The MP can take immediate protective actions, secure an area, isolate the threat and, when authorized, use SRTs to assist civilian or HN authorities in apprehending or neutralizing the sniper. The MP are trained to perform the necessary actions when an explosive device is discovered. In such an event, they can secure and evacuate an area, organize search teams, and isolate the site.

11-17. The MP can also support in rescue and recovery operations, which may include rescuing US or foreign nationals. Such operations are also employed to locate, identify, and recover sensitive materials deemed critical to national security. The operations may be conducted in benign or hostile environments. The MP provide OPSEC, and they process and account for civilians affected by rescue and recovery operations. The MWD teams can also help search for lost or hidden personnel. In stability and support operations, the MP can perform

their police functions for rescue and recovery operations while keeping the perceived military signature low.

SUPPORT TO COUNTERDRUG OPERATIONS

11-18. Counterdrug operations are measures taken to disrupt, interdict, and destroy illicit drug activities. In a counterdrug role, the DOD may offer certain forms of support to HN counterdrug personnel, to US civilian law-enforcement agencies operating in a HN, to Department of State (DOS) counterdrug personnel, and to the Bureau of International Narcotics Matters. Without direction from the National Command Authority acting under constitutional or statutory authority, US forces engaged in counterdrug activities may not engage in direct law-enforcement activities (such as apprehension, search, seizure, and other similar activities). As discussed earlier, the Posse Comitatus Act authorizes specific DOD assistance in counterdrug activities, but US military forces usually may not participate directly in arrests, searches, seizures, and similar activities. Conversely, as discussed earlier, USC Title 32 authorizes state governors to use NG MP units with full authority to engage directly in law-enforcement activities. When authorized, US advisors may accompany counterdrug forces on operations.

11-19. MP operational contributions can include the use of force, drug identification, crime-scene protection, customs operations, surveillance of criminal activity, serious-incident reporting, and other related activities. Employing the MP for these operations ensures force suitability and avoids a mismatch in terms of unit capability and mission effectiveness.

11-20. Border-screening operations consist of three separate but related measures—mobile patrolling, the use of listening/observation posts, and airfield surveillance. These measures are part of the MP's AS and MMS functions used in tactical rear-area operations. The MP's operational effectiveness may be further increased through augmentation by a civilian law-enforcement officer who would be responsible for search, seizure, and arrest actions. Active-component units are permitted to assist in marijuana eradication in support of domestic law-enforcement agencies (DLEAs). Marijuana-eradication operations are an application of the MP AS, mobility, and L&O functions, thus providing realistic training while supporting an operation.

11-21. As discussed in previous chapters, the MP are well suited to augment customs operations. They routinely perform customs inspections for US forces in Korea and Germany. The NG MP regularly conduct vehicle, cargo, and container searches under the supervision of US Customs agents and at US ports of entry.

11-22. The USACIDC agents can provide support to counterdrug operations. The CID units identify the sources of illegal-drug distribution systems. When directed, the MP and the CID complement interagency counterdrug efforts to stop the production, flow, and distribution of drugs and to provide planning, training, equipment, and facilities to support domestic counterdrug operations. The CID also supports CRIMINTEL programs, internal security, and site surveys at borders where Army units will deploy. In addition to the

aforementioned support, the DOD General Counsel has ruled that MWD teams can be loaned to DLEAs to assist in detecting smuggled contraband.

SUPPORT IN COMBATING TERRORISM

11-23. The Department of Justice (DOJ) is the lead federal agency for dealing with acts of terrorism within the US, its territories, and its possessions. Within the DOJ, the Federal Bureau of Investigation (FBI) has the lead. The FBI can train the police of friendly nations in antiterrorism and counterterrorism operations. Usually, US military forces act in a technical-advisory but not a law-enforcement capacity in combating acts of terrorism. It is often difficult to distinguish the acts of politically motivated terrorists from violent acts of criminals or individuals in society at large. In fact, all terrorist acts are criminal; however, they also may be part of an insurgency.

11-24. The MP are key players in the defensive planning, implementation, and control of combating-terrorism operations, whether in garrison or deployed to war or MOOTW. In whatever countries US forces operate, MP units conduct antiterrorism operations daily as part of their L&O and AS functions. The MP also respond to terrorist incidents. They help secure the area and search for evidence, and they help the lead agency. The MP provide advice and assistance in developing antiterrorism and counterterrorism programs for deployed US forces and DOS agencies and for police, paramilitary, and military forces of assisted nations (when so authorized). MP training, liaison, and joint patrols help strengthen HN-police organizations, improving their effectiveness and efficiency in combating terrorism. The MP also assist HN police in performing PRC operations.

11-25. The training of police (domestic and foreign) requires DA approval, and restrictions exist on some forms of training. Legal advice and coordination are a must before training can occur. The MP and the CID provide personnel and equipment for planning, advising, equipping, and training agencies to prevent, deter, and respond to terrorism. The training focuses on deterring terrorist acts such as bombings, kidnappings, assassinations, taking hostages, and hijackings. Related assistance may include training and equipment for explosive detection, management of hostage situations, physical security, protection of key personnel, and defensive/evasive driving methods. For counterterrorism operations on US military installations, the MP provide highly trained, specially equipped SRTs for situations requiring the selective use of force. Additionally, CID agents are highly trained in hostage negotiation, which increases the commander's options before resorting to force.

11-26. The MP and the CID assist in counterterrorism information-gathering activities through liaison and joint patrols with HN police. These activities are part of the PIO function. The MP have extensive contacts with civilian police, who in turn have contacts with the populace. These contacts can help surface criminal information concerning terrorist plans, recruitment, and support structures sooner than military sources. The CID can provide commanders with CRIMINTEL on a daily basis. At the same time, MP antiterrorism support includes measures to reduce the vulnerability of people and property. Such measures include—

- Personal awareness.
- Personal-protection operations and techniques.
- Crime prevention.
- Physical-security programs.

11-27. The MP and CID crime-prevention programs employ proactive measures to protect people and their property and US and HN property. Crime prevention is a continuous process of planning, implementing measures, evaluating effectiveness, modifying measures, and developing further information. The primary crime-prevention tool is the crime-prevention survey. It is used to examine the physical features of various critical sites. The MP physical-security programs help identify, reduce, eliminate, or neutralize conditions favorable to criminal, terrorist, and insurgent activities. The key measures used to accomplish this are physical-security inspections and surveys.

SUPPORT TO NONCOMBATANT EVACUATION OPERATIONS

11-28. Noncombatant evacuation operations (NEOs) relocate civilians who are endangered in a foreign nation. The NEOs are classified as benign (unopposed) or hostile (opposed). MP roles in support to NEOs differ accordingly. In a benign environment, NEOs are usually conducted with the help and full cooperation of the affected nation, with little or no opposition to evacuation. The use of force is limited to self-defense (as outlined by the ROE) and protection of the evacuees. In a hostile environment, NEOs are opposed by forces with specific intentions of preventing or destroying the operation. In this scenario, the MP will follow the ROE as established by higher headquarters.

11-29. MP operations in NEOs closely parallel EPW/CI evacuation operations. The objective of both is to safely collect, secure, protect, transport, process, and account for people, whether they are EPWs or noncombatants. However, due to the dissimilarities of these groups, the techniques employed differ.

11-30. The MP can secure selected facilities, reception and transfer points, or other locations required to collect, process, and evacuate people. They can provide route reconnaissance and mobile security teams to escort HRP, DOS personnel, evacuees, and sensitive material. If needed, MP units assist civil-affairs personnel with the movement and control of dislocated civilians. The MP may support civil affairs by setting up and operating evacuation sites, holding areas for foreign nationals denied evacuation, and reception and processing stations. This support can be provided by MP CS units for a short duration and by MP I/R units for a prolonged duration. Additionally, the MP will establish and maintain liaison with HN police to ensure a mutual understanding of jurisdiction, to coordinate efforts, and to provide criminal and tactical intelligence. In hostile environments requiring the employment of combat forces, the MP would be employed in their traditional CS role.

SUPPORT TO SECURITY-ASSISTANCE OPERATIONS

11-31. Security-assistance operations are one of the main tools of US foreign policy. A critical concern in these operations is the HN's ability to plan and

manage its own defense resources. In security-assistance operations, the US provides defense materiel, military training, and defense-related services through grants, loans, credit, or cash sales. When authorized, the MP support security assistance with military and police training through the International Military Education and Training Program (IMETP). This program provides instruction and training to foreign military and civilian personnel on a grant/aid basis. Many foreign civil law-enforcement agencies request training in the following areas:

- Basic police procedures (such as patrolling and crime-scene protection).
- Physical security.
- Corrections.
- Civil-disturbance operations.
- Customs operations.
- Traffic control.
- Use of force.

11-32. The MP possess the expertise and experience to advise, train, and assist a HN's military and police forces. The MP's participation in the IMETP includes—

- Formal and informal instruction of foreign students.
- Technical education and tactical training with applicable training aids.
- Assistance to foreign police and military elements by MP mobile training teams (MTTs).
- Providing MP units or small, modular, functionally specific teams to support security-assistance needs. These teams can train HN police in both field and institutional facilities.
- Support to nation-assistance operations.

11-33. Nation-assistance operations support a nation's effort to promote development, ideally by using its national resources. This is achieved through education and the transfer of essential skills to the HN. The goals of such operations are to—

- Promote long-term regional stability.
- Develop sound and responsive democratic institutions.
- Develop supportive infrastructures.
- Promote an environment that allows for orderly political change and economic progress.

11-34. The MP support nation-assistance operations with training and joint MP and HN-police operations. The MP know and understand police operations, military operations, and C^2 procedures. Consequently, the MP are ideal for training the law-enforcement personnel in both field and institutional settings. The MP's nation-assistance goals are to—

- Enhance L&O in democratic societies.
- Improve efficiency and effectiveness.
- Promote the proper usage and maintenance of equipment.
- Establish a sound training base for police.

- Standardize procedures that enhance combined police operations.
- Promote friendship and goodwill toward the US.
- Preclude the need for US military interventions to counter acts of violence.

11-35. Combined police operations reinforce training and provide HN police with mobility, security, and communications to operate more effectively while conserving critical personnel resources. The MP provide support through training and the following:

- Law-enforcement, security, and criminal-information support to the HN police force (to include L&O operations and administration in a democratic society).
- Patrol and desk operations.
- Circulation-control operations.
- PRC and civil-disturbance operations.
- MWDs.
- Physical-security operations.
- Personnel-security operations.
- Area- and route-security operations.
- Counterdrug operations.
- Antiterrorism operations.
- Mass immigration operations.
- Customs and border operations.
- Confinement operations.
- Crime prevention.
- Community and police relations.
- C^2 of police operations.

11-36. When conducting nation-assistance operations, as well as other operations, the MP will often be tasked to support civil-affairs operations. Close coordination with the G5/S5 and liaison with the appropriate HN representatives have added emphasis to these types of operations. The scope of civil-affairs operations is influenced by the economic, social, psychological, and political background of the country and its people. Civil-affairs personnel will coordinate the MP's effort to restore stability, contribute to national development, and promote support for the host government. Civil-affairs personnel assist in preventing civilian interference with military operations and coordinate all other military and civil affairs (such as community relations, PRC, civil defense, and community- and area-security programs).

11-37. The MP can conduct ADC measures to assist the HN in the aftermath of a natural or man-made disaster. They help rescue and evacuate the injured for medical care, and they issue food, water, and essential supplies (See FM 41-10).

SUPPORT TO PEACEKEEPING OPERATIONS

11-38. Peacekeeping operations (PKOs) are military operations conducted with the consent of the belligerents in a conflict. The PKOs are intended to maintain negotiated truces and to facilitate diplomatic solutions. The US may

participate in a PKO under the auspices of an international organization, in cooperation with other countries, or unilaterally. A PKO usually occurs in an ambiguous situation in which there is extreme tension and the possibility of violence. This violence may range from terrorism and sabotage to minor military conflicts involving known and unknown belligerents. MP forces may serve as an element of a UN peacekeeping force or as part of a multinational observer group. The overall operational control of a peacekeeping force is exercised by a multinationally staffed military peacekeeping command. However, the commander of each assigned national force retains command integrity of his unit.

11-39. The basic MP force structure and appropriate augmentation are situation dependent. The size and composition of the MP forces are determined by diplomatic negotiations. Personnel spaces are allocated based on the US contingents' respective missions. The principle of consent affects the composition and function of the peacekeeping force. Consent applies to the degree of interest the disputing countries have when contributing their forces to participate in the peacekeeping effort.

11-40. Each PKO is unique but is generally characterized by constraints in the use of force. In a PKO, force is normally limited to self-defense, the defense of others, and the protection of national security. Therefore, the soldiers in a PKO must possess the skills required for warfare, but they must also be trained so that they are equally able to act as intermediaries. In this aspect, the MP are a distinct asset. They are experienced in a case-by-case approach to the use of force. They are experienced in using discretion and in the de-escalation of potential violence. The MP training in EPW operations are especially useful in handling EPWs if the peacekeeping force supervises the exchange of prisoners of war.

11-41. The peacekeeping force employs a combination of the following techniques to control the potential for violence inherent to PKOs:

- Observation is the peacekeeping force's primary responsibility and basic requirement. It provides timely and accurate reports of any suspicious situation, incident, or occurrence.
- Information gathering is a continuous requirement. Peacekeepers must be constantly alert to what takes place around them and to any changes or inconsistencies in the behavior, attitude, and activities of military and civilian personnel.
- Surveillance and supervision operations help oversee the implementation of agreements. The operations require restraint, tact, and patience.
- Complaint investigations must be thorough and objective, and they must result in a fair assessment.
- Negotiation and mediation skills are often required of peacekeepers. If peacekeepers can resolve minor problems at the lowest level, they can prevent major issues from rising, which may prevent increased tensions or the resumption of fighting.
- Patrolling (mounted and dismounted) among the population publicizes presence. It also serves as a means of gathering information, informally enhancing supervision, and investigating complaints.

11-42. The above techniques are compatible with MP battlefield functions. Operationally, the MP conduct route and area R&S, operate mounted or dismounted patrols, operate listening/observation posts, provide humanitarian assistance, investigate possible terrorist and criminal acts and cease-fire and sanction violations, and gather information. The MP provide a flexible, wide-ranging means of information dissemination. Additionally, they provide crucial support for force protection. The MP and the CID employ active and passive measures to deter and defeat threats directed at service members, their families, DOD civilians, facilities, equipment, and very important persons (VIPs). The MP use emerging technologies in force protection to conduct security, detection, and identification operations and to warn of intruders.

11-43. As part of a PKO, the MP conduct crowd- and riot-control operations, including the extraction of mob leaders. The MP are an ideal force for controlling antagonistic masses engaged in rioting, looting, and demonstrating. The MP understand how to make the transition from the lower end of the use-of-force spectrum to the use of lethal force, if so required or directed. Finally, the MP deploying with peacekeeping forces can provide early-on force protection, including headquarters and initial aerial port/ seaport of debarkation (APOD/SPOD) security. The MP's mobility, firepower, and communications provide critical reconnaissance, information-collection, and response-force capabilities and acceptability not found in combat forces.

11-44. When conducting crowd- and riot-control operations in a PKO or peace-enforcement operation (PEO), nonlethal weapons (NLWs) are an additional means of employing force for the purpose of limiting the probability of death or serious injury to noncombatants or belligerents. However, the use of lethal force must always remain an inherent right of individuals in instances when they, their fellow soldiers, or personnel in their charge are threatened with death or serious bodily harm. The NLWs add flexibility to the control of disturbances by providing an environment where military forces can permissively engage threatening targets with limited risk of noncombatant casualties and collateral damage (see FM 90-40).

11-45. The use of lethal force (employed under the standing ROE) will never be denied. At no time will forces be deployed without the ability to defend themselves against a lethal threat nor will they forego normal training, arming, and equipping for combat. Nonlethal options are a complement to, not a replacement for lethal force. They seek to expand a proactive response across the range of military operations.

11-46. The decision to use NLWs against an adversary during a confrontation should be delegated to the lowest possible level, preferably to the platoon or squad. However, this requires that all personnel (not just leaders) have a clear understanding of the ROE and the commander's intent.

11-47. Commanders and public-affairs officers must be prepared to address media questions and concerns regarding the use and role of NLWs. They must be prepared to address the role of NLWs, and they must make it clear that the presence of NLWs in no way indicates abandoning the option to employ deadly force in appropriate circumstances.

11-48. The PEOs are in the high end of the PKO's spectrum. These operations are just short of combat and require a different operational approach. MP operations to support PEOs correspond to MP battlefield functions supporting combat forces. The PEOs often pose special operational considerations for dealing with dislocated civilians. The MP provide PRC operations and I/R, when required.

ORGANIZATIONS AND CAPABILITIES

11-49. MP units are well suited for stability and support operations given their unique capabilities and low force signature. The MP brigade, battalion, company, and I/R units may be tailored for stability and support operations based on their unique METT-TC.

MP BRIGADE TF

11-50. In essence, the organization and capabilities of the MP organization in stability and support operations is the same as those for other operations. However, its augmentation is tailored based on METT-TC unique to stability and support operations and the commander's needs. The MP brigade has been the centerpiece of successful MP deployment during previous stability and support operations. The MP brigade provides comprehensive planning, C^2, and A/L support to assigned and attached subordinate units. The brigade also has the command and staff experience to coordinate and supervise HN security and law-enforcement activities.

11-51. The MP brigade headquarters provides senior MP leadership and the communications capabilities required to direct a variety of functional elements—CSS, PSYOP, public affairs, and combat-arms augmentation—in support of joint or unilateral TF operations. At authorized level of organization (ALO) 1, the MP brigade headquarters has an SJA section to coordinate the legal and jurisdictional issues inherent to stability and support operations. The brigade headquarters also has an S5 section and a liaison capability to coordinate support and assistance to HN agencies, friendly forces, other US forces, DOS personnel, and nongovernmental or private volunteer organizations.

11-52. The MP brigade TF (MPBTF), with its robust capabilities and low force signature, is well suited for the unique mission requirements and sensitivities of stability and support operations. The MPBTF can be employed as part of a combat TF in high-threat, opposed-entry operations or as the lead TF for a low-threat, unopposed-entry operation. The following are examples of previous MPBTFs and the operations in which they participated:

- **Operation Provide Comfort.** The 18th MP Brigade deployed to northern Iraq to provide humanitarian assistance and protection to the Kurds.
- **JTF Los Angeles.** The 49th MP Brigade (NG) provided civil-disturbance assistance to Los Angeles in the aftermath of the Rodney King trial.
- **Operation Hawkeye.** The 16th MP Brigade and units of the 89th MP Brigade provided security, protection, and humanitarian

assistance to the population of Saint Croix in the aftermath of Hurricane Hugo.

- **JTF Andrew.** The 16th MP Brigade provided humanitarian assistance in the aftermath of Hurricane Andrew.
- **Operation Sea Signal.** The 89th MP Brigade deployed to Guantanamo Bay, Cuba, to provide humanitarian assistance to Haitian migrants.
- **Operation Restore Democracy.** The 16th MP Brigade deployed to Haiti to provide humanitarian assistance.

11-53. Early deployments of the MPBTF headquarters or a mission-tailored portion of the headquarters positions a senior, effective MP C^2 headquarters to respond to all MP requirements. It can assist in the coordination with the media, governmental and nongovernmental agencies, and other forces, and it can coordinate civil-military aspects of the operation. The MP brigade headquarters can assimilate and employ additional forces without degrading operations. The augmentation of brigade headquarters is driven by METT-TC. With the brigade headquarters in place, subordinate or supporting units can be significantly expanded without the loss of C^2. In essence, little or no loss in operational momentum occurs when the C^2 element deploys first.

11-54. The MP LRP section of the MP brigade headquarters colocates and works with the higher headquarters' G3/Operations Directorate (J3) plans element. This allows the MP LRP to incorporate MP operations effectively into higher-level planning, and it enables an efficient transition to field operations. Also, because in peacetime this section functions as a PM cell, it provides the PM with efficient and effective technical support during stability and support operations. As the operations approach termination or enter sustainability and fewer forces are required, the brigade headquarters can redeploy, leaving a battalion TF in charge of MP forces.

MP BATTALION TF

11-55. The MP battalion (CS) provides command, control, and support for assigned MP companies (CS). MP battalions (CS) are best employed as part of a TF—either as part of a combat TF (high threat, opposed) or a support TF (low threat, unopposed). With sufficient augmentation, the battalion can provide the logistical, administrative, personnel, and operational support needed to lead a diverse TF. During stability and support operations, an MP battalion TF may be placed under the OPCON of a brigade-size TF (MP or non-MP) or a division TF. If placed under the OPCON of a division TF, both the division PM and the MP battalion commander will synchronize their efforts to maximize the employment of available divisional and nondivisional MP assets in support of the division commander's concept of operations.

11-56. As with the MPBTF, the MP battalion's contributions to stability and support operations are not a new concept. The following are examples of previous battalion TFs and the operations in which they were involved:

- **Cuban Refugee Movement.** The 519th, 716th, 720th, and 759th MP Battalions deployed for humanitarian-assistance operations.
- **Operations Restore Hope and Continued Hope.** The 720th MP Battalion provided humanitarian assistance in Somalia.

- **Operation Sea Signal.** The 720th MP Battalion deployed to Guantanamo Bay, Cuba, to conduct humanitarian-assistance operations for Haitian migrants. Later, the 716th and 759th MP Battalions also deployed to Guantanamo Bay to perform like functions for the Cubans.

MP COMPANY IN STABILITY AND SUPPORT OPERATIONS

11-57. The MP company is the MP Corps's primary mission performer. It executes a wide variety of missions. In these operations, MP companies—

- Provide mobility support for both vehicles and personnel.
- Provide AS, including security for critical personnel, sites, cargoes, and railways.
- Secure, safeguard, shelter, and control detainees and dislocated civilians.
- Restore order in civil disturbances and conduct PRC operations.
- Carry out limited L&O operations.
- Provide liaison, coordination, and training for all aspects of law enforcement to other agencies.
- Conduct police-intelligence collections and disseminate information to the populace, friendly forces, and other HN agencies.
- Support force protection and security.

11-58. The MP company possesses robust mobility, lethality, and communications. Each of the MP companies' three-man teams are equipped with either a high-mobility, multipurpose, wheeled vehicle (HMMWV), an up-armored HMMWV, or an armored security vehicle (ASV); an AN/VRC 91 radio; a Light-Vehicle Obscuration Smoke System (LVOSS); an MK-19 grenade machine gun; a squad automatic weapon (SAW); two M-16 or M-4 rifles; an M203 grenade launcher; and a 9-millimeter pistol as a side arm for each team member. In addition to conducting combat operations, the MP company commander has the capability to conduct limited L&O operations (desk and investigative operations). With a tremendous operational reach, the MP company will displace its platoons as far as possible to accomplish all of the MP functions.

MP I/R UNITS IN STABILITY AND SUPPORT OPERATIONS

11-59. The MP I/R units are specifically equipped and trained to support, safeguard, account for, and provide proper and humane treatment for EPWs/CIs, US military prisoners, or dislocated civilians. When conducting dislocated-civilian operations, the MP I/R units support and interact with civil-affairs and PSYOP units who are responsible for monitoring and handling dislocated civilians. Should more than one category of personnel have to be supported, the MP I/R units will establish separate compounds for each to preclude contact with other populations. When operation of the facility is going to be more than a short-term endeavor, the intent is to involve (as appropriate) NGOs, IHOs, HN authorities, and dislocated civilians in the administration of the facility. The tasks performed by MP I/R units for stability and support operations are basically the same as those for war, but the operations and procedures are modified according to the operational

environment and the categories of people to be housed in the facility (see FM 19-40).

11-60. Criminal detainees (who are detained against their will) are subject to controls and procedures that closely parallel those used for EPWs/CIs. The primary emphasis is on guarding and preventing escape until their disposition is determined by recognized civilian judicial/law-enforcement authorities. When the operation is conducted outside of the US and its territories, criminal detainees are treated according to established legal procedures.

11-61. Dislocated civilians (who are being assisted rather than detained) are provided aid, shelter, and protection. The emphasis is on protecting them from harm by natural forces or hostile personnel. A special category of personnel arises when the MP I/R unit is required to house personnel that are dislocated civilians but who must be detained against their will. Such is the case of mass migrants who flee their countries and find themselves under US custody while formal proceeding guidance is being developed. In this case, MP I/R units must be sensitive to the situation and attempt to strike a balance between security, shelter, protection, and detention procedures.

11-62. Military detainees (who are detained against their will) are subject to controls and procedures that closely parallel those used for EPWs/CIs. In stability and support operations, US forces detain opposing-force military personnel. Without a formal declaration of war, opposing military personnel who are captured cannot be categorized as EPWs. However, they are afforded many of the EPW's rights and privileges under the Geneva convention. Such a situation occurred during Operation Just Cause when PDF personnel were detained by US forces.

11-63. In an operational environment in which hostile groups are engaged against one another, an I/R facility may be set up to protect one group from another. In this case, the facility's purpose is to shelter, sustain, account for, and protect its dislocated civilians from the hostile group. The MP I/R units and other supporting units concentrate on providing AS to protect the facility from direct fire. Other MP or combat forces provide protections beyond the direct-fire zone. Accountability for the dislocated civilians is coordinated with the SJA and civil affairs. They focus on maintaining a record of the people in the facility and their physical conditions. In operations in which no hostile groups are engaged (such as natural disasters), the I/R facility may be set up to provide shelter, sustain, and account for personnel. There may not be a need for external security personnel.

11-64. The MP I/R C^2 structure for stability and support operations is based on METT-TC. The nature and complexity of the mission, the number and types of detainees, and the operational duration should be considered. At one end of the operations spectrum, an MP brigade (I/R) may be required; while at the other end, an MP battalion (I/R) may be assigned to an MP brigade (CS).

Chapter 12

Force Protection

There is no more important responsibility than force protection. It is an inherent command responsibility and must be fully integrated into every unit's mission. A commander must continually review his unit's force-protection posture and crosswalk it with current and changing policy and threat levels. Force protection demands the personal involvement of commanders to ensure the best possible security consistent with the threat to personnel and mission-essential resources.

AR 525-13

Force protection consists of those actions that prevent or mitigate hostile actions against DOD personnel (to include family members), resources, facilities, and critical information. It coordinates and synchronizes offensive and defensive measures to enable the joint force to perform while degrading opportunities for the enemy. It includes air, space, and missile defense; NBC defense; antiterrorism; defensive-information operations; and security to operational forces and means.

OVERVIEW

12-1. The MP contribute significantly to the Army's overall force-protection effort. They are directly responsible for executing certain security-related measures (law enforcement and physical security) and for providing support to others (HRP security and antiterrorism), all of which contribute to force protection. Commanders use the Army's risk-management methodology and established security programs and capabilities within US forces to help prioritize and implement force-protection measures.

SUPPORT TO FORCE PROTECTION

12-2. MP support to force protection is accomplished under the leadership of the respective command's PM. It is accomplished mainly through an active role in physical security, HRP security, law enforcement, and antiterrorism.

PHYSICAL SECURITY

12-3. Physical security is an integral part of security of forces and means. Physical-security measures deter, detect, and defend against threats from terrorists, criminals, and unconventional forces. These measures include—

- Fencing and perimeter standoff space.
- Lighting and sensors.

- Vehicle barriers.
- Blast protection.
- Intrusion-detection systems and electronic surveillance.
- Procedural measures such as security checks, training and awareness, property accountability/inventory requirements, physical-security inspections of mission-essential or vulnerable areas (MEVAs), and physical-security surveys of installations.

12-4. These physical-security measures are not exclusively peacetime measures. They are designed to protect US personnel and equipment regardless of the mission or the geographical location.

12-5. The MP support the commander's security of forces and means programs by—

- Controlling or monitoring installation, base, or base-cluster access or entrance points.
- Monitoring intrusion-detection systems and providing a response force.
- Conducting physical-security inspections.
- Conducting perimeter security or site surveillance.
- Recommending the placement of walls, berms, gates, or barriers around designated MEVAs, high-value areas, or perimeters.
- Supporting the commander's risk-analysis effort.
- Conducting roving patrols, checkpoints, or roadblocks.
- Performing other physical-security measures as required by the commander.

HRP SECURITY

12-6. The HRP security program provides additional security to designated individuals (and their families) whom by virtue of their rank, assignment, symbolic value, vulnerabilities, or location or a specific threat are at a greater risk than the general population. This security program is applicable across the full spectrum of military operations.

12-7. The MP support the commander's HRP security measures by—

- Conducting protective-service details for HRP (normally conducted by USACIDC special agents).
- Responding to duress alarms and intrusion-detection systems.
- Conducting a PSVA (performed by the USACIDC).
- Employing MWDs.
- Coordinating with local, state, and federal agencies as well as joint, multinational, and HN law-enforcement agencies.
- Performing other HRP security measures as required by the commander.

LAW ENFORCEMENT

12-8. The Army's law-enforcement program supports the security of forces and means through the prevention, detection, response, and investigation of

crimes. The MP, the USACIDC, and DOD police play a crucial role in the law-enforcement program. They provide a visible deterrent against a broad portion of the threat spectrum, investigate crimes, and provide an initial response force to threat incidents. As with the previous programs, the law-enforcement program is applicable anywhere across the spectrum of military operations.

12-9. The MP support law-enforcement operations by—

- Providing liaison teams with local, state, and federal agencies; HN police; and joint and multinational agencies.
- Employing SRTs and hostage-negotiation teams (normally provided by the USACIDC).
- Providing traffic enforcement, MSR regulation enforcement, and other route-control measures.
- Employing MWDs.
- Conducting MP investigations (criminal and noncriminal).
- Conducting patrolling, AS, and surveillance measures.
- Implementing applicable threat-condition (THREATCON) measures.
- Conducting and implementing other law-enforcement measures as required by the commander.

ANTITERRORISM

12-10. Terrorism is characterized as the unlawful use of violence or the threat of violence to coerce or intimidate a government or a society. Protection against a terrorist threat requires both an offensive counterterrorism capability and a defensive antiterrorism program. The primary focus of antiterrorism is on training and awareness and thorough planning. Antiterrorism is not a stand-alone program. It leverages other force-protection-related programs (such as physical security and law enforcement) to provide much of the physical defense against terrorism.

12-11. The MP support the commander's antiterrorist program by—

- Collecting CRIMINTEL (within the limits of AR 190-45).
- Responding to terrorist threats and incidents.
- Performing aggressive patrols and R&S operations.
- Detecting suspicious activities.
- Enforcing joint and cooperative agreements with the FBI, the USACIDC, MI, and other pertinent agencies (home or abroad).
- Conducting information collection and dissemination.
- Protecting critical assets, facilities, and personnel.
- Performing other antiterrorism measures as required by the commander.

Appendix A

Metric Conversion Chart

This appendix complies with current Army directives which state that the metric system will be incorporated into all new publications. Table A-1 is a conversion chart.

Table A-1. Metric Conversion Chart

Metric to English			English to Metric		
Multiply	**By**	**To Obtain**	**Multiply**	**By**	**To Obtain**
Length					
Centimeters	0.0394	Inches	Inches	2.54	Centimeters
Meters	3.28	Feet	Feet	0.0305	Meters
Meters	1.094	Yards	Yards	0.9144	Meters
Kilometers	0.621	Miles (stat)	Miles (stat)	1.5609	Kilometers
Kilometers	0.540	Miles (naut)	Miles (naut)	1.853	Kilometers
Millimeters	0.039	Inches	Inches	25.40	Millimeters
Area					
Square centimeters	0.1550	Square inches	Square inches	6.45	Square centimeters
Square meters	10.76	Square feet	Square feet	0.0929	Square meters
Square meters	1.196	Square yards	Square yards	0.836	Square meters
Volume					
Cubic centimeters	0.610	Cubic inches	Cubic inches	16.39	Cubic centimeters
Cubic meters	35.3	Cubic feet	Cubic feet	0.0283	Cubic meters
Cubic meters	1.308	Cubic yards	Cubic yards	0.765	Cubic meters
Milliliters	0.0338	US liq ounces	US liq ounces	29.6	Milliliters
Liters	1.057	US liq quarts	US liq quarts	0.946	Liters
Liters	0.264	US liq gallons	US liq gallons	3.79	Liters
Weight					
Grams	0.0353	Ounces	Ounces	28.4	Grams
Kilograms	2.20	Pounds	Pounds	0.454	Kilograms
Metric tons	1.102	Short tons	Short tons	0.907	Metric tons
Metric tons	0.984	Long tons	Long tons	1.016	Metric tons

Appendix B

Doctrine and Training Literature

Users of this manual must understand the elements of doctrinal literature and their relationship to each other. The commonly used terms doctrine and tactics, techniques, and procedures (TTP) are interrelated and mutually supportive; yet, each term has its own usage, level of detail, and place in the hierarchy of doctrinal publications. Because there is a close interrelationship, publications overlap in what they provide to the user. Figure B-1 illustrates the relationship of these doctrinal terms and publications.

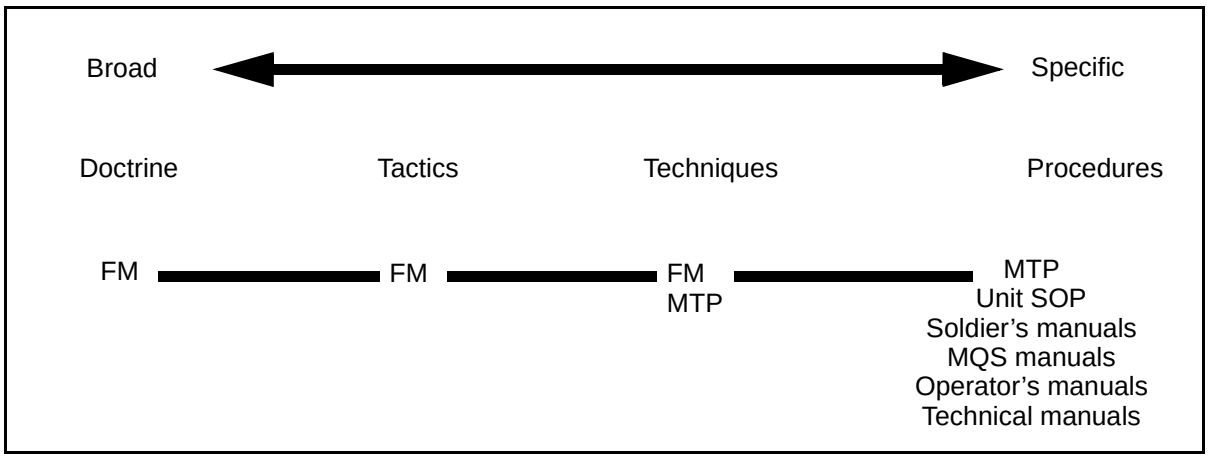

Figure B-1. Doctrinal and Training Literature

DOCTRINE

B-1. Doctrine is the body of fundamental principles by which the military guide their actions in support of national objectives. It is authoritative, but requires judgment in application. Doctrine provides the Army's fighting philosophy, establishes a common language, and structures the manner within which units plan and conduct combat operations.

B-2. Doctrine is not absolute; it is applied by the leader to meet the circumstances of the situation being faced. Doctrine provides for this flexibility with broad fundamentals and principles for conducting operations. Leaders well grounded in doctrine understand how to synchronize the elements of combat power and how to apply TTP using the assets available to accomplish the mission.

B-3. Doctrine is described in FMs. FM 3-0 defines the systems of war fighting practiced by the US Army. FMs 100-15 and 71-100 expand on this foundation. This manual describes the CS doctrine of the MP; it is the capstone manual for MP operations. It defines the role, operational requirements, functions, and C^2 relationships of MP units. This manual is not oriented on a specific organizational structure. Leaders at all levels apply this doctrine to their unique organizational and operational situations and use various tactics and techniques to accomplish the doctrine.

TACTICS

B-4. Tactics describe how the leader carries out doctrine (relating to the arrangement of forces for battle). Tactics include the—

- Employment of units in combat (to accomplish a mission assigned by the commander).
- Ordered arrangement and maneuver of units in relation to each other and to the enemy in order to use their full potential (a description of how the commander should arrange his forces and maneuver to accomplish a mission).

B-5. This is the part of doctrinal literature used for training in preparation for combat. Like doctrine, tactics presented in manuals are applied with judgment by the leader. The FMs prescribe "how to fight" and the mission training plans (MTPs) describe "what to train."

TECHNIQUES

B-6. Techniques are the methods of performing any act, especially the detailed methods used by troops or commanders in performing assigned tasks. Techniques describe the basic methods of using equipment and personnel. Techniques give details on how commanders actually carry out assignments. They improve the force's efficiency by ensuring the uniformity of action or by ensuring that the actions of various individuals and elements complement those of other individuals or elements.

B-7. The FMs and MTPs provide a description of techniques using the personnel and equipment available in actual organizations. These techniques show (at a more detailed level) how to use available assets to carry out tactics.

PROCEDURES

B-8. Procedures are the lowest level of detail. They address “how to” at the task level. Procedures are a particular course or mode of action that describe how to perform a certain task. Procedures include the—

- Standing methods used by units to accomplish tasks.
- Operating procedures for weapons and equipment.
- Crew drills.
- Staff actions and coordination requirements.
- Methods of target engagement by direct- and indirect-fire weapons.

B-9. Procedures are building blocks of individual- and collective-task accomplishment that serve as the foundation of tactics and techniques. Procedures are explained in unit standing operating procedures (SOPs), MTPs, soldier's manuals, operator's manuals, technical manuals (TMs), and similar publications.

Appendix C

Battlefield Workload Analysis

With minor adjustments in the capability block, the BWA can be used to determine MP requirements for the division. A BWA work sheet is shown in Figure C-1. A separate matrix is prepared for each EAC and corps MP brigade. Figure C-2, page C-3, is a sample of a BWA matrix for a 3-division corps MP CS company.

Mission/Function[1]	Capability[1]	Workload[2]	Rqmt	HN[18]	US Rqmt	Risk[19]	Mission Rqmt
Divisions supported[3]	1						
MMS	360 km MSR and ASR						
Refugees on control routes[4]	150,000 per day						
AS—corps rural terrain[5]	2,000 sq km						
AS—EAC rural terrain[5]	3,000 sq km						
AS—urban terrain[5]	800 sq km (urban)						
AS—USAF main opns base[5]	1,000 sq km/USAF MOB						
AS—convoy escort[6]	# tms per convoy	# convoys					
AS—ammo security[7]	1.3 modular ammo co						
	2 modular ammo co						
AS—pipeline security[8]	400 km						
AS—EAC pipeline co[8]	3						
AS—trains[9]	7						
AS—small critical sites[10]	12						
AS—major HQ security[11]	1						
AS—EAC port security[12]	0.66 of port						
AS—combat operations	When required, assets are diverted from other missions.						
L&O—incident response[13]	75,000 nondivision troops						
I/R—US prisoner detention[14]	700						
I/R—EPW escort/corps[15]	1,900 walking						
	2,500 by vehicle	Min: 1 plt					
	3,800 by train						
I/R—EPW holding/corps[16]	2,000	Min: 1 plt					
Other assigned missions[17]	Mission	Force size					
		Totals[20]					
Battalion HHD requirement = 0.199 x number of companies[21]							

Figure C-1. Sample BWA Work Sheet

NOTE: Workload ÷ capability = doctrinal requirement - HN offset = US requirement - acceptable risk = mission requirement

[1]Mission/capabilities are as stated in section I of TOEs 19477L000 and 19677L000. The unit capability for each mission is what the unit can accomplish when performing no other mission (for example, if it is only doing MSRs, the unit can cover 360 kilometers in a 24-hour period). Unless otherwise specified, the capabilities are the same at corps and EAC.

[2]Workload is the amount (MSR or area) or number of supported units/facilities.

[3]Corps support to each division is covered by allocating one MP company per supported division. Any additional support requirements should be based on a detailed division PM/MP mission analysis and included under other assigned missions.

[4]Unless specifically tasked, the Army normally relies on HN support to manage refugees. Redirecting refugees from MSRs and keeping them off of MSRs is part of (as is straggler control and TCP) the mission and MSR workload. When assigned the mission, the capability is for control of refugees on established refugee control routes that are in addition to the MSRs.

[5]Compute each square kilometer mission requirement separately. Do not compute the same terrain in more than one computation (for example, the area around the Air Force's main operating base (MOB) is not included with either rural or urban square kilometers).

[6]Convoy-escort capability is not stated in the TOE and is an AS function rather than an MMS function. Determine the average number of teams per mission and the average number of simultaneous missions. Multiply the number of teams required per mission by 0.028, then multiple the result by the number of simultaneous missions to determine the total requirement. State the number of teams per convoy and the number of convoys, then convert the force size to a 3-decimal-place company equivalent. Each additional team, squad, and platoon equivalent equals 0.028, 0.083, and 0.25 respectively.

[7]Security for modular ammo companies (ASPs) supporting divisions is three platoons and is normally conducted directly behind the division (corps forward). However, METT-TC may require the ammo units to move into the DRA. In this case, corps units should be attached to the division for the duration. Security for corps storage areas (CSAs) and theater storage areas (TSAs) is one MP company per two ammo companies. Security is provided on an area-support basis in the form of screening, with limited fixed posts.

[8]The EAC petroleum terminal/pipeline operating company manages the EAC pipeline that is normally laid adjacent to MSRs. Pipeline security is inherently provided by the MP operating on the MSRs. Unless the pipeline is not near the MSR, MP support is only allocated against the EAC petroleum terminal/pipeline operating company's bulk storage facilities. Security is provided on an area-support basis in the form of screening, with limited fixed posts.

[9]Train security is normally an EAC mission. This capability equates to simultaneously providing five MP teams to each of seven trains. Actual workloads and requirements are computed in the same manner as a convoy escort.

[10]Small critical facilities are normally defined as key MSR bridges and tunnels and communication nodes that may require additional security.

[11]The major headquarters are corps, COSCOM, TSC, unified command and, if directed, the JTF. The ASCC depends on the MP to provide security for two CPs. The ASCC requirement is an additional three platoons to support a second CP.

[12]The requirement for one seaport is 1.5 companies.

[13]Teams provide incident response, crime-scene security, and traffic control. They also assist L&O detachment teams and CID investigators.

[14]For deliberate planning in support of an OPLAN, personnel to be confined will normally be held by either the unit or the EAC I/R MP battalion performing the confinement mission. This does not preclude a requirement for the echelon PM to operate a field detention facility until prisoners are released back to their units or evacuated to the EAC confinement facility.

[15]The primary mode is vehicle (back-haul doctrine). Regardless of the mode, a minimum of one platoon (0.25 requirement) per supported division is allocated for EPW escort from the division central collection point (DCCP) to the corps holding area (CHA). Because the actual number of EPWs is unknown, coupled with no time/distance study for each supported division, one platoon per division provides a minimum capability for continuous evacuation within the stated doctrinal timeline (evacuate to the CHA within 12 hours of arrival at the DCCP).

[16]At a minimum, one platoon (0.25 requirement) is allocated to operate the CHA (provides the capability to hold 500 EPWs at any given time).

[17]Add any additional continuous missions assigned by the echelon commander not covered above. Examples include VIP escort/security for other than the CG and the deputy commanding general (DCG) of major headquarters, screening exposed corps flanks, and increasing teams per mission/function which decreases doctrinal capability (for example, permanent TCPs or checkpoints). Each additional team, squad, or platoon equivalent equals 0.028, 0.083, and 0.25 respectively.

Figure C-1. Sample BWA Work Sheet (continued)

[18]For each mission/function, any workload either fully or partially accomplished by the HN is subtracted from the doctrinal mission requirement. Enter the MP company equivalent offset and subtract from the doctrinal requirements to determine the US requirement.

[19]For each mission/function, if the operational/MP commander will accept mission risk, subtract the MP company equivalent to determine the mission requirement.

[20]Add columns to determine the total doctrinal company requirement, HN offsets, US requirement, acceptable risk, and mission requirement to support the operation/AO. Round the requirement to the nearest whole number (0.4 or fewer rounds down, 0.5 or greater round up).

[21]Determine battalion HHD requirements by multiplying the company requirements by 0.199 and rounding.

Figure C-1. Sample BWA Work Sheet (continued)

Mission/Function	Capability	Workload	Rqmt	HN	US Rqmt	Risk	Mission Rqmt
Divisions supported	1	3	3.000		3.000		3.000
MMS	360 km MSR and ASR	1,050	2.917		2.917		2.917
Refugees on control routes	150,000 per day	25,000	0.167	0.167	0.000		0.000
AS—corps rural terrain	2,000 sq km	6,500	3.250		3.250	0.500	2.750
AS—EAC rural terrain	3,000 sq km						
AS—urban terrain	800 sq km (urban)	1,500	1.875		1.875	0.500	1.625
AS—USAF main opns base	1,000 sq km/USAF MOB	1,000	1.000		1.000		1.000
AS—convoy escort	5 tms per convoy	4	0.560		0.560		0.560
AS—ammo security	1.3 modular ammo co	3	2.308		2.308		2.308
	2 modular ammo co	1	0.500		0.500		0.500
AS—pipeline security	400 km						
AS—EAC pipeline co	3						
AS—trains	7						
AS—small critical sites	12	9	0.750		0.750	0.250	0.500
AS—major HQ security	1	2	2.000		2.000		2.000
AS—EAC port security	0.66 of port						
AS—combat operations	When required, assets are diverted from other missions.						
L&O—incident response	75,000 nondivision troops	45,000	0.600		0.600	0.300	0.300
I/R—US prisoner detention	700						
I/R—EPW escort/corps	1,900 walking						
	2,500 by vehicle	Min: 1 plt/div	0.750		0.750		0.750
	3,800 by train						
I/R—EPW holding/corps	2,000	Min: 1 plt/	0.250		0.250		0.250
Other assigned missions	PSD for Corps CofS	1 sqd	0.083		0.083		0.083
	Flank screen	1 plt	0.250		0.250		0.250
		Totals	20	0.177	20	1.3	19
Battalion HHD requirement = 0.199 x number of companies			4		4		4

NOTE: Workload ÷ capability = doctrinal requirement - HN offset = US requirement - acceptable risk = mission requirement

SAMPLE

Figure C-2. Sample BWA Matrix

Appendix D

Automated Information Systems in Support of Battle Command

As the MP Corps continues to advance into the twenty-first century, it must continue to pursue and stay in tune with the Army's initiative to acquire advanced technologies and operational concepts. This will give MP soldiers on the battlefield an information advantage that is critical for successful performance of their functions. The following information opens a window into the near future and explains some of the automation initiatives that will enhance the Army's and the MP Corps's soldiers.

ARMY INFORMATION SYSTEMS

D-1. The Global Command and Control System (GCCS) is the midterm solution and the bridge to the concepts outlined in the concept of command, control, communications, computers, and intelligence for the warrior (C4IFTW). The GCCS's core consists of the basic functions required by the war fighter to plan, execute, and manage military operations. The Army's selected C^2 system is the Army Battle Command System (ABCS).

D-2. The ABCS integrates the C^2 systems found at each echelon—from the ground-force component commander at the theater or JTF level to the individual soldier or the weapons platform. Whether ARFOR are deployed for land combat or are conducting peace operations, providing humanitarian assistance, or giving aid to civil authorities, the ABCS supports the mission by integrating the battle-space automation systems and communications that functionally link strategic and tactical headquarters. The ABCS is interoperable with joint and multinational C^2 systems at upper echelons across the full range of C^2 functionality, and it is vertically and horizontally integrated at the tactical and operational levels. The ABCS has three major components—

- The Global Command and Control System—Army (GCCS-A).
- The Army Tactical Command and Control System (ATCCS).
- The FBCB2.

GLOBAL COMMAND AND CONTROL SYSTEM—ARMY

D-3. The GCCS-A is the Army's component of the joint GCCS. It was built from application programs developed by the Army Worldwide Military Command and Control System [WMCCS] Information System (AWIS), namely the—

- Strategic Theater Command and Control System (STCCS).

- Theater Automated Command and Control Information Management System (TACCIMS).
- EAC portion of the Combat Service Support Control System (CSSCS) (CSSCS/EAC).

D-4. The GCCS-A is required in the MP LRP, S1, S3/NBC, and S4 sections within the MP brigade at EAC; in the Assistant Chief of Staff, G1 (Personnel) (G1), the G3, and the Assistant Chief of Staff, G4 (Logistics) (G4) sections within the MP command (I/R); and in the S1, S3, and S4 sections within the MP brigade (I/R).

ARMY TACTICAL COMMAND AND CONTROL SYSTEM

D-5. The ATCCS embodies the commander and his staff and the doctrine, procedures, and tools used to command and control forces on the tactical battlefield. The ATCCS's functional subsystems provide tools to support the C^2 process across the spectrum of low- to high-intensity conflicts worldwide; for MOOTW; and for combat, CS, and CSS functional areas at corps-and-below units. The ATCCS provides a common set of C^2 tools and functions for commanders that extends the ATCCS to the battalion level. The component's ATCCS's are the—

- Maneuver Control System (MCS).
- All-Source Analysis System (ASAS).
- Advanced Field-Artillery Tactical Data System (AFATDS).
- Air- and Missile-Defense Planning and Control System (AMDPCS).
- CSSCS.

D-6. The FBCB2 provides situational awareness and C^2 to the lowest tactical echelons. It facilitates a seamless flow of battle-command information and situation-awareness information across the battle space at brigade and below on Army platforms.

FORCE XXI BATTLE COMMAND—BRIGADE AND BELOW

D-7. The FBCB2 system, a battle-command information system, provides the technology to complete the ABCS information flow process from brigade to platform and across all platforms within the brigade TF. The FBCB2 enables commanders to remotely operate and maintain ABCS database connectivity (regardless of the command vehicle) and to digitally control and monitor their subordinate units' statuses and positions. Interoperable FBCB2 systems will enhance the battle commander's ability to have a detailed picture of the battlefield (situational awareness), to maximize force survivability, and to facilitate battlefield synchronization to reduce or destroy the enemy's capability to fight. The FBCB2 relies on integrating, processing, and moving information in a digital form. To support projections of future conflicts with an accompanying increase in the tempo of battle, the FBCB2 must be able to obtain information contained in databases from higher, lower, and adjacent elements without formally requesting that information through command channels. The war fighter requires the ability to pull data from all battlefield-system databases to keep current with the rapid changes caused by the dynamics of battle. The FBCB2 is required for divisional MP company commanders, PMs, platoon leaders, teams, and squads.

MANEUVER CONTROL SYSTEM

D-8. The MCS is the ABCS's horizontal and vertical integrator. The MCS will enable commanders and their staffs to collect, coordinate, and act swiftly on near-real-time battlefield information. It will quickly, accurately, and automatically move tactical information on the battlefield. This allows a commander to readily access information and display current situation reports (SITREPs) that assess enemy strength and movement as well as the status of friendly forces. The MCS will then aid the battle staff in rapidly disseminating the commander's orders. It is intended to provide two major functional capabilities—maneuver functional-area control and force-level information. The MCS is the ATCCS's functional subsystem that—

- Supports the combined-arms force commander directly by providing automated support for planning, coordinating, controlling, and using maneuver functional-area assets and tasks.
- Coordinates and synchronizes supporting arms in conducting operational planning, field operations, and training.

D-9. The MCS is required for division PM operations sections, company CPs at echelons corps and below (ECB), MP battalion commanders, S3 sections at corps, MP brigade commanders, and corps MP LRP and S3 sections.

ALL-SOURCE ANALYSIS SYSTEM—REMOTE WORK STATION

D-10. The ASAS—remote workstation (RWS) subsystem will operate within the existing intelligence and electronic warfare (IEW) battlefield operating system (BOS) and ABCS architectures to provide automation support to G2/S2 intelligence staff elements and other designated intelligence organizations from the maneuver battalion through EAC. It will operate at the security level appropriate to its echelon, mission, and functions. It assists the G2/S2 in providing IEW support to the commander and other staff elements in planning, coordinating, and conducting current and future tactical operations. It interfaces with the sensitive compartmented information (SCI) analysis and control element (ACE) subsystem to provide operational guidance and to exchange IEW information and products. It also operates as the technical control portion of the IEW C^2 node of the ABCS to provide current IEW and enemy-situation information to the force-level information database for access and use by ABCS users. Two RWSs are also provided to the brigade analysis control team (ACT) of the DS MI company to process data input from DS collection systems, to filter intelligence data from broadcast systems, and to pass tactically relevant enemy-situation information or situation-development data to the brigade S2's RWS. The ASAS-RWS is required in the S2 section of the CID group, the S2/S3 section of the CID battalion, the G2 section of the MP command (I/R), the S2 section of the MP battalion (I/R), and the S2 section of the MP battalion and brigade at all echelons.

COMBAT SERVICE SUPPORT CONTROL SYSTEM

D-11. The CSSCS will function as an integral part of the ATTCS. It is designated as an information system with the capability to rapidly collect, analyze, and disseminate logistical, medical, and personnel information to accelerate and improve decision making by CSS and force commanders. It also

enables the rapid exchange of C^2 information with other battlefield functional areas (BFAs) through automated interfaces. The system will process unclassified through secret information. The CSSCS will be employed in all divisions, corps, EAC, separate brigades, and armored cavalry regiments. The MP require CSSCS functionality in all S1 and S4 sections in battalion or higher organizations except where the GCCS-A is required as stated above.

TRANSPORTATION COORDINATOR AUTOMATED MOVEMENT SERVER

D-12. The Transportation Coordinator Automated Movement Server (TC-AIMS II) is used by transportation agents and deploying units of each service to automate the processes of planning, organizing, coordinating, and controlling deployment and redeployment operations worldwide during peace as well as contingencies. The TC AIMS II will link all DOD-component unit movements with the installation transportation officer/traffic-management officer (ITO/TMO). This will provide the capability to plan and execute deployments rapidly to meet CINC-required arrival and departure dates. The TC AIMS II will also provide the ITO's/TMO's day-to-day traffic management functions and the theater transportation managers with the capabilities to use theater common lift assets effectively. The TC AIMS II will also allow CSS organizations and supporting commands to sustain the force and perform effective movement control, coordination, distribution, and sustainment once in theater. This is also defined as transportation movement and support of DOD personnel and cargo during all phases of military operations in all environments (including RSOI and battlefield operations). The TC AIMS II's functionality is required at all division PM operations and S3 sections within MP battalions and brigades to facilitate MSR regulation enforcement. Additionally, MP companies, battalions, brigades, and commands require the TC AIMS II to plan, organize, coordinate, and control deployments and redeployments.

GLOBAL COMBAT SUPPORT SYSTEM—ARMY

D-13. The GCSS-A is an integrated logistical support system with accompanying hardware that will connect the service's supply, finance, transportation, maintenance, and personnel databases. Under this system, the Army will integrate 13 Legacy tactical logistics systems and will eventually interface with the service's wholesale logistics systems as well as the consolidated logistics systems of the other services and the DOD. The system is critical for modernizing automation, for reducing logistical footprints in theaters, and for expanding war fighters' capabilities. The system will also replace the Standard Army Management Information System (STAMIS). The GCSS-A is required at all MP division company CPs and MP battalion and brigade S4 sections. Additionally, it is required at all supply functions within MP detachments that support I/R missions.

MILITARY POLICE AUTOMATED SYSTEMS

D-14. In an effort to maintain an information advantage and to acquire advance technologies and operational concepts, the MP Corps has acquired the following systems:

- The Military Police Management Information System (MPMIS) and its subsystems
- The CID's automated systems and their subsystems.

MILITARY POLICE MANAGEMENT INFORMATION SYSTEM

D-15. The MPMIS is a DA-mandated reporting system that does not interface with the ABCS. The MPMIS provides automated tools for MP records management and reporting. It reduces the administrative burden on the PM's staff. It increases the awareness of problem areas by managing crime information. The MPMIS consists of the following elements:

- **Offense Reporting Systems Windows (ORS-2W).** The ORS-2W provides automation support to track and report complaints, criminal incidents, and traffic incidents. It incorporates the CRC, the federally mandated National Incident-Based Reporting System (NIBRS), the DOD-mandated Defense Incident-Based Reporting System (DIBRS), the military community (MILCOM), and the installation's data requirements. The ORS-2W's functionality is required at PM activities at all echelons of command within the Army.
- **Correctional Reporting System (CRS-3).** The CRS-3 provides automation support to track and report inmates and corrections staff at all Army-controlled correctional facilities.
- **Security Management System (SMS).** The SMS provides automated support to assist physical-security inspectors and force-protection officers in reporting inspections and surveys. It tracks intrusion-detection devices and MWD training and health requirements.
- **Vehicle Registration System (VRS).** The VRS provides installations with an automated means to track vehicle, weapon, and bicycle registrations.
- **Prisoner-of-War Information System (PWIS-3).** The PWIS-3 provides the automated means of tracking an EPW's status from capture through release. This system is required at all EPW management activities.

CID AUTOMATED SYSTEMS

D-16. The Headquarters (HQ) USACIDC mandates CID automated systems. Similar to the MPMIS, it does not interface with the ABCS. The system facilitates data-collection efforts within the command. The CID's automated systems consist of the—

- **Automated Criminal Investigative Reporting System (ACIRS).** The ACIRS supports management and data-collection functions at the CRC and HQ USACIDC. It supports the following:
  - Maintaining investigative data.
  - Conducting agent investigative activities.
  - Reporting investigative data.
  - Managing the investigative processes.
  - Conducting criminal-activity analyses.

- **CRIMINTEL.** Data sources for CRIMINTEL include MP reports, CRIMINTEL reports and bulletins, reports of investigation, crime-prevention surveys, case files, collection folders, raw-data folders, significant data files, and target-analysis files. The CRIMINTEL interfaces with the ACIRS, but it does not share CRIMINTEL products.

Appendix E

Police Information Assessment Process

The PIAP differs somewhat from the tactical IPB. While the IPB allows the maneuver commander to see the effects that a variety of factors may have on his forces, the PIAP looks beyond this approach to determine how other relevant information may impact his forces. This information may be obtained from police or criminal actions or incidents encountered during the performance of MP functions.

IMPLEMENTATION

E-1. The PIAP is not a substitute for the IPB. MP leaders must continue to rely on the IPB and to use its estimates as a starting point for the PIAP. However, the PIAP is a dynamic and continuous cycle that complements the IPB (Figure E-1). The following paragraphs represent the doctrinal approach to implementing the PIAP. These steps provide the basic foundation to the process. They are not exclusive; the successful development of the PIAP will depend on the MP leader's ability to apply the process to his specific environment, METT-TC, and the commander's priorities.

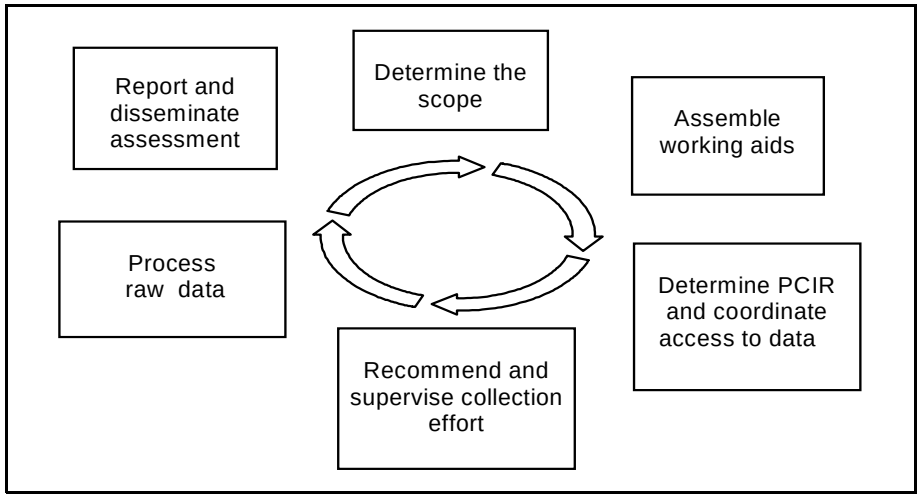

Figure E-1. The PIAP

DETERMINE THE SCOPE OF THE PIAP

E-2. While determining the scope of the PIAP might sound simple, it is one of the most crucial elements of the entire process. It entails identifying what you want to be the end result of your PIAP. To help determine the scope of the PIAP, MP leaders must perform the following subtasks:

- **Conduct a mission analysis.** A detailed mission analysis will ensure that all available resources are focused toward one goal. The more specific the mission is, the more focused and productive the effort. This involves more than just looking at the mission statement, the commander's intent, and the concept of operations. It involves translating the mission and situation into easily understood, manageable goals. The following are examples of these missions:
  - Identifying criminal threats from local national to US Army logistics operations within the port of Mogadishu, Somalia.
  - Determining the impact of gang violence on US forces operating in the vicinity of Camp Bondsteel, Kosovo.
  - Determining how rioters' violence will affect force protection before deploying forces to Los Angeles, California.
  - Determining the status of public service agencies (such as the police, the fire department, and the emergency medical services [EMS]) in Homestead, Florida, after the city was struck by Hurricane Andrew.

NOTE: As you can see from the examples, these missions are quite specific. In all likelihood, it would be necessary to establish several different PIAP missions to adequately protect Army elements operating in the MP's AOR.

- **Prioritize missions.** MP leaders must prioritize each PIAP mission since MP resources will probably be limited. The commander's intent is the key factor for determining priorities. When the commander's most important mission has been determined, MP leaders must decide how they can contribute to the overall success of that mission.
- **Determine the AO.** Generally, the AO is a geographical area (including the airspace above) usually defined by lateral, forward, and rear boundaries assigned to a commander. MP leaders must know where major units are located and how the characteristics of the location may impact ongoing operations. For example, units in direct contact with the enemy or isolated from the local population are less likely to be the target of a PIAP mission than those units adjacent to great population centers or in rest and relaxation centers.
- **Determine key terrain.** Key terrain is any locality or area that affords a marked advantage to the retaining side.
- **Determine the AOI.** An AOI is the area of concern to the commander. This includes the area of influence and the areas adjacent thereto and extending into enemy territory and to the objectives of current or planned operations. A thorough understanding of the AOI may help predict potential threat actions. For example, how far are local agitators and ringleaders willing to travel to interfere with US operations in Pristina, Kosovo? Would they go to other US compounds?
- **Determine required information products/sources.** The desired end-state product must be decided. Should it be a report? An updated SITREP? An upgrade in force-protection measures? Or a combination of products? It should also be determined who can provide the best

information (the CID; MI; the local police chief; or joint, interagency, or multinational agencies).

ASSEMBLE WORKING AIDS

E-3. During this step, MP leaders assemble the necessary graphic and nongraphic aids and information that will help them accomplish their mission. The CID and the MP may form an analysis team to track and analyze police information that might assist tactical operations or population-control operations. Working aids include, but are not limited to—

- **Maps.** Besides the standard military maps that depict the military AOs, the MP must attempt to procure indigenous maps of AOs. Detailed city and street maps will prove to be invaluable even if they are in a foreign language.
- **Language aids.** Phrase books and translation dictionaries cannot take the place of intensive language training, but they are better than nothing. These are essential even if the MP have assigned interpreters.
- **Open-source information.** This can cover an extensive range of invaluable information, but it should be available from a variety of sources. Examples include—
  - Demographic information on the HN population.
  - Societal information on the HN.
  - The locale and disposition of HN police forces.
  - Historical crime data of the area.
  - Environmental information (terrain and weather factors).
  - Local newspaper articles.
  - Internet sources on all of the above.

NOTE: Sources for this type of information can come from intelligence estimates provided by the higher headquarters' S2/G2, other military units, or the HN.

- **OPSEC information.** This information includes the disposition of US forces (to include MP, MI, CID, and other services' investigating units) deploying or being used within the AO.
- **Other working aids.** These may include items such as computers, printers, boards, and acetate that will be necessary depending on the missions the MP are undertaking.

DETERMINE INFORMATION REQUIREMENTS AND COORDINATE ACCESS TO DATA

E-4. Once the mission analysis is completed, the next step is to determine if there are information gaps. An information gap is a missing piece of information that is critical to the analysis. MP leaders must identify and prioritize the gaps using the time, the available resources, and the commander's intent. Once an information gap is identified, it becomes PCIR. Examples of PCIR are as follows:

- Where is the nearest police station, and how did they handle a certain problem?

- What is the composition of the two gangs operating in our AO, and how can they influence US operations?
- Why is river-crossing point Bravo a danger to US crossing forces? Why are local rioters disrupting only US operations on the east bank?

E-5. The next step is to determine if PCIR can be answered with data already available. To do this, the available military and nonmilitary sources must be identified. Some sources may include—

- **USACIDC.** The USACIDC is responsible for programs such as combating terrorism, CRIMINTEL, personal-security assessment, crime analysis, and LOGSEC threat assessment. Some of the information gathered by the USACIDC (although releasable under existing controls and restraints) may help with the PIAP mission. In fact, USACIDC special agents may already be working in the AO and may be available to help the MP with the collection effort.
- **MI element.** Like the USACIDC, the MI element operating in the AO may have come across a piece of information (police or criminal) that may help accomplish the PIAP mission. The MP must make daily contact with the S2/G2 and coordinate access to invaluable information. As with the USACIDC, available intelligence information may only be releasable under strict controls and restrictions imposed by the commander.
- **Other MP units.** Coordination with an adjacent MP unit may prove to be beneficial, especially if the other MP unit has conducted a similar PIAP mission or has conducted operations in the AOI.
- **HN law-enforcement agencies.** Local law-enforcement agencies will provide the essential populace knowledge otherwise not available to US forces. Chiefs of police, sheriffs, and other key community leaders may help MP leaders fill the information need of the PIAP mission.
- **Joint, interagency, and multinational forces.** Close and effective liaison with these elements will result in quick access to information that can produce the same benefits as the agencies listed above.

NOTE: If, after consulting with all available sources, the PCIR is not resolved, the MP leader must decide the best collection effort to solve the PCIR.

RECOMMEND AND SUPERVISE THE POLICE/CRIMINAL COLLECTION EFFORT

E-6. The collection effort is the means by which specific PCIR will be met. This implies developing a collection strategy, tasking specific collectors, and supervising the collection effort.

- **Develop a collection strategy.** After a through study of the availability, capability, and disposition of the potential collecting resources, MP leaders select which asset is better suitable to perform the mission. Are organic MP the best collectors for this mission? Or do we need to request support from USACIDC units? What unique or organic capabilities do each bring to the effort? Which MP function is the best? Do we conduct MMS, AS, or L&O operations? Part of the collection strategy includes coordinating with the S2/G2, the SJA, the

CID, and other agencies before launching the collection effort. This coordination will eliminate duplication of effort, interference with an ongoing effort, or stepping out of legal limits.

- **Task or request specific collectors.** The missions that will be tasked to respective collectors must be determined. Information collectors can be tasked with more than one mission at a time. However, it is imperative that their tasks be prioritized based on mission requirements and time available. The appropriate tasking or request chain must be used to request an MP team, a platoon, or USACIDC special agents.
- **Supervise the collection effort.** The collectors must be provided with reporting guidelines. How often should they report? Should they report "no information?" Specific reporting instructions should be provided, including how, when, and where they report. A collection tasking chart should also be used (Figure E-2). As more and more collectors are being used, it becomes important to track their missions, capabilities, and success. A brief note on the reporting instructions of each collector should be included.

PIAP Missions	Unit Tasked	Echelon Employed	POC	Collection Strategy Employed	Date Collection Started	Location	Date Collection Ended
PCIR 1							
PCIR 2							
PCIR 3							
PCIR 4							

Figure E-2. Collection Tasking Chart

PROCESS POLICE/CRIMINAL RAW DATA

E-7. This processing step converts raw data into police intelligence through analysis. The key to processing the data is to understand it. For example, as collectors report raw data it may often appear to be meaningless information. Rarely will one collector receive all of the necessary information to answer the PCIR at one time. Instead, a variety of information must be fitted together to form a coherent, even if incomplete, picture.

E-8. Every piece of data is important. This is the cardinal rule of the entire process. Until the data is analyzed for reliability and compared with other data, all reports must be treated equally. This is important to remember, for the trend will be to use data that either fits your expectations or gives the most complete picture.

E-9. A report of "no activity" can be as important as reports with information. If the collector is capable of collecting the information and is actively trying to collect, reports of "no activity" can be critical. First, if there is no indication of a change, they can be used to reprioritize PIAP missions. Second, they can be used to retask the collectors to other areas. It is important to check the mission's original intent periodically to ensure that it is still valid and merits further efforts.

E-10. To determine the reliability of the data, the MP leader must evaluate the source. Does the information come from the police chief, local youth, or other military forces? One of the best ways to determine the reliability of the information is to have more than one collector reporting on the same PCIR. If more than one collector reports the same information, it can normally be presumed to be accurate.

E-11. Information can be analyzed in a variety of ways—chronologically, geographically, by the impact on the force, by the type of activity or the modus operandi, or by the association of participants. The MP leader must evaluate the information after it is analyzed to determine whether the information collected answers the PCIR or whether it helps accomplish the PIAP mission. If the information does not answer these questions, he must decide whether it is necessary to task other collectors, retask the same collectors, or wait until the situation develops.

REPORT AND/OR DISSEMINATE POLICE AND CRIMINAL ASSESSMENT

E-12. Reporting and disseminating is the most important aspect of the PIAP. Collection and analysis is valueless unless the data is communicated to commanders who can best use the information.

E-13. Reporting requirements must be established based on the unit's SOP and other established processes. MP leaders must decide if the information collected must be sent using an established priority format or if it can wait to be sent using SITREPs. Does the information collected affect the force-protection measures or does it immediately impact the tactical scenario? Do we need to alert units operating in the vicinity of AA Fox to avoid sector 2? Additionally, MP leaders must ensure that any information released follows existing constraints and regulations.

E-14. It is also advantageous to provide feedback to the collectors. Collectors often receive no feedback on their performance. Informing them as to which part of their information was vital and beneficial can often increase their productivity in future operations.

SAMPLE SCENARIO

E-15. The following example helps illustrate the implementation of all six steps of the PIAP:

E-16. While deployed in support of Operation Control Chaos, US forces assigned to TF Blue Thunder are tasked with stability and support operations in the city of Corbina. This city, although currently implementing a peace treaty, was the site of extreme civil unrest. Even though the overall situation is not as chaotic as it was before US intervention, there are some sectors that

are still in turmoil. Common crimes (such as robberies, assaults, looting, and vandalism) still occur daily and there is fear that this condition may spread out of control throughout the city. The TF commander knows that in order to bring peace to the entire city, he must attempt to stabilize the situation in some of these bad sectors. He decides that the best way to deal with this situation is to assign a sector (sector 51) to an MP battalion in an attempt to control the situation. If the MP battalion succeeds, he may use the same concept throughout the city. He is aware of the five MP functions and how they can help bring this sector under some control. Under this framework, the TF commander issues the following mission: *On order, the MP battalion will conduct stability and support operations in the vicinity of sector 51, the city of Corbina, in support of TF Blue Thunder.* Upon receipt of this mission, the battalion commander gathered his staff and initiated the planning process. Before the MP staff could initiate the PIAP, they made contact with the S2/G2 and received an updated IPB estimate. Now that the IPB estimates are on-hand, the staff initiates the PIAP.

DETERMINE THE SCOPE OF THE PIAP

E-17. The staff performs the following steps to determine the scope of the PIAP:

- **Conduct a mission analysis.** The staff looks at the given mission, the higher echelon commander's intent, and the concept of operations. After considering all of these factors, they produce a restated mission—*On order, the battalion will conduct MP operations in sector 51 to determine the type of threat and to bring this sector under control in support of TF Blue Thunder.*
- **Prioritize PIAP missions.** Since there is only one mission, this subtask is not applicable.
- **Determine the AO and the AOI.** The staff determines that the AO is the entire sector 51 and that the AOIs are the sectors adjacent to 51.
- **Determine key terrain.** The staff determines that the key terrains are the market place, the plaza, and the city park. They select these areas because most of the incidents occurred in these populated areas. Stabilization in these key areas may be advantageous to mission success.
- **Determine required information products/sources.** The end result is the stabilization of sector 51. Minimize the crime incidents and restore L&O. Information should come from the local police chief, local community leaders, civil affairs, PSYOP, and the CID.

ASSEMBLE WORKING AIDS

E-18. The staff assembles the following working aids in support of the PIAP:

- **Maps.** The staff acquires local maps that detail the market place, the plaza, and the city park. Although the maps are in a foreign language, the staff is able to identify these three prominent features and surrounding areas.
- **Language aids.** In addition to dictionaries, the staff is able to get two translators from civil affairs.

- **Open-source information.** Open-source information includes a variety of encyclopedias and country books. Newspaper reports and historical crime data is available via the internet or through MI sources. The emphasis is in obtaining information on the history and composition of the local police force.
- **Classified intelligence.** The staff receives a briefing from the S2/G2 describing the operations of SOF units in the area.
- **Other working aids.** Computers, charts, templates, and acetate are available.

DETERMINE INFORMATION REQUIREMENTS AND COORDINATE ACCESS TO DATA

E-19. After a careful analysis of all available information, the following information gaps were turned into PCIR:

- Why is the police force not actively engaged in L&O?
- What is the major threat to civilians in each area?
- Are local gangs involved?
- Is their local judicial system in place?
- Where are prisoners housed?

E-20. The staff consults with the USACIDC, MI, other MP units, and other sources but determines that the information provided is not clear or sufficient. Since the PCIR are not resolved, the staff decides to recommend that the commander initiate a collection effort.

RECOMMEND AND SUPERVISE THE POLICE/CRIMINAL COLLECTION EFFORT

E-21. The staff performs the following steps to recommend and supervise the police/criminal collection effort:

- **Develop a collection strategy.** Upon coordinating with the S2/G2, the SJA, and the CID, the MP commander decides that the best collectors will come from within organic assets. He decides that he will employ the MP to go out and seek the needed information. The battalion commander will employ a company commander to interview the local police chief and an MP/interpreter will patrol around the designated AOI. The MP commander will need additional interpreters to help him with his collection effort.
- **Task or request specific collectors.** The MP staff requests an interpreter through the normal chain of command. The TF G3 assigns six interpreters for a period of 90 days.
- **Supervise the collection effort.** All collectors are instructed to report not later than (NLT) 1800 every day. The report will be in the form of an "end of day" outbrief to the S2 and the battalion commander. A collection tasking chart (Figure E-3) will also be completed.

PROCESS POLICE/CRIMINAL RAW DATA

E-22. After receiving all of the above information, the S2 concludes that the inability of the police force to do their job has had a domino effect on all areas

of peace and order. This information is confirmed through other reports from information collected by the CID (through their own efforts) and the CA. The information also reveals that the gangs have intentions of attacking US forces if they interfere with their "business." The S2 determines that although the situation may seem to be chaotic, once the locals are able to trust the police forces, everything should return to normal.

REPORT AND/OR DISSEMINATE POLICE AND CRIMINAL ASSESSMENT

E-23. Since the collection effort identifies a potential threat to US forces, the commander decides to notify higher headquarters and increase his own force-protection measures. He requires MP elements patrolling in designated areas to be no less than a squad. If patrolling dismounted, a HMMWV or an ASV will trail the squad. The MP commander uses the information provided during the PIAP to develop his implementation plan. This plan includes joint patrols, training, and construction of a joint MP/local national police station.

	PIAP Mission: Bring Sector 51 Under Control							
PCIR	**Unit Tasked**	**Echelon Employ-ed**	**POC**	**Collection Strategy Employed**	**Date Collection Started**	**Location**	**Date Collection Ended**	**PCIR Result**
Why is the police force not actively engaged in L&O operations?	A Co	2 teams	CPT Smith	Direct interview	31 Jan 00	Sector 51, Police HQ	2 Feb 00	The police force does not know how to interact with the population.
What is the major threat to civilians in each area?	A Co	6 teams	1LT Thomas	Patrol and interview	31 Jan 00	Market place, plaza, and park	7 Feb 00	Muggings, robberies, and stabbings are the major threats to civilians.
Are local gangs involved?	A Co	2 teams	CPT Smith	Direct interview	31 Jan 00	Sector 51, Police HQ	2 Feb 00	Two rival gangs exist.
Is a local judicial system in place?	A Co	2 teams	1LT Jones	Direct interview	31 Jan 00	Courthouse	3 Feb 00	A judicial system exists, but the judge is afraid to sentence anyone.
Where are the prisoners housed?	A Co	4 teams	1LT Lucas	AS and MMS	31 Jan 00	Local prison	2 Feb 00	The local prison is abandoned.

SAMPLE

Figure E-3. Sample Collection Tasking Chart

Glossary

1LT	first lieutenant
A/L	administrative and logistics
AA	assembly area
AATF	air-assault task force
ABCS	Army Battle Command Systems
ACE	analysis and control element
ACIRS	Automated Criminal Investigative Reporting System
ACT	analysis control team
ADA	air-defense artillery
ADC	area damage control
AFATDS	Advanced Field-Artillery Tactical Data System
ALO	authorized level of organization
AMDPCS	Air- and Missile-Defense Planning and Control System
AO	area of operation
AOE	Army of Excellence
AOI	area of interest
AOR	area of responsibility
APOD	aerial port of debarkation
APOE	aerial port of embarkation

AR	armored
AR	Army regulation
ARFOR	Army forces
AS	area security
ASAS	All-Source Analysis System
ASCC	Army service component command
ASG	area support group
ASP	ammunition supply point
ASR	alternate supply route
ASV	armored security vehicle
ATCCS	Army Tactical Command and Control System
attn	attention
AWIS	Army WMCCS Information System
BCT	brigade combat team
bde	brigade
BFA	battlefield functional area
BLD	brigade liaison detachment
bn	battalion
BOS	battlefield operating system
BRT	brigade reconnaissance troop
BWA	battlefield workload analysis

C^2	command and control
C^3	command, control, and communications
C4I	command, control, communications, computers, and intelligence
C4IFTW	command, control, communications, computers, and intelligence for the warrior
CAS	close air support
CASE	corps-area support element
CCIU	computer-crime investigative unit
cdr	commander
CG	commanding general
CHA	corps holding area
CI	civilian internee
CID	Criminal Investigation Division
CIDR	Criminal Investigation Division Regulation
CINC	commander in chief
CIP	Criminal Intelligence Program
cmd	command
CMOC	civil-military operations center
co	company
COA	course of action
CofS	Chief of Staff
commo	communications

COMMZ	communications zone
conf	confinement
CONUS	continental US
COSCOM	corps support command
CP	command post
CPT	captain
CRC	Crime Records Center
CRIMINTEL	criminal intelligence
CRS-3	Correctional Reporting System
CS	combat support
CSA	corps storage area
CSE	corps support element
CSG	corps support group
CSM	command sergeant major
CSS	combat service support
CSSCS	Combat Service Support Control System
cust	customs
CZ	combat zone
DA	Department of the Army
DC	District of Columbia
DCCP	division central collection point

DCG deputy commanding general

DIBRS Defense Incident-Based Reporting System

DISCOM division support command

div division

DLEA domestic law-enforcement agency

DMMC division materiel management center

DNA deoxyribonucleic acid

DOD Department of Defense

DOJ Department of Justice

DOS Department of State

DPM deputy provost marshal

DRA division rear area

DS direct support

DSA division support area

DSB division support battalion

DSE division support element

DSS decisive, shaping, and sustaining

DZ drop zone

EAC echelons above corps

EAD echelons above division

ECB echelons corps and below

EMS emergency medical services

EPW enemy prisoner of war

ERP engineer regulation point

ES escort

FA field artillery

FBCB2 Force XXI Battle Command—Brigade and Below

FBI Federal Bureau of Investigation

Feb February

FEBA forward edge of the battle area

FIU field investigative unit

FM field manual

FOB forward operating base

FOIA Freedom of Information Act

FORSCOM US Army Forces Command

FSB forward-support battalion

FSC forward-support company

G1 Assistant Chief of Staff, G1 (Personnel)

G2 Assistant Chief of Staff, G2 (Intelligence)

G3 Assistant Chief of Staff, G3 (Operations and Plans)

G4 Assistant Chief of Staff, G4 (Logistics)

G5 Assistant Chief of Staff, G5 (Civil Affairs)

G6	Assistant Chief of Staff, G6 (Communications)
GAC	ground-assault convoy
GCCS	Global Command and Control System
GCCS-A	Global Command and Control System—Army
GD	guard
GO	government organization
GS	general support
HHB	headquarters and headquarters battery
HHC	headquarters and headquarters company
HHD	headquarters and headquarters detachment
HMMWV	high-mobility, multipurpose, wheeled vehicle
HN	host nation
HQ	headquarters
HRP	high-risk personnel
HVA	high-value asset
I/R	internment and resettlement
IBCT	initial/interim brigade combat team
IC	information center
IEW	intelligence and electronic warfare
IG	inspector general
IHO	international humanitarian organization

IMETP	International Military Education and Training Program
IO	international organization
IPB	intelligence preparation of the battlefield
ISB	intermediate staging base
ITO	installation transportation officer
J3	Operations Directorate
Jan	January
JFC	joint-force command
JOA	joint-operations area
JP	joint publication
JRA	joint rear area
JSOA	joint special operations area
JTF	joint task force
km	kilometer(s)
L&O	law and order
LID	light infantry division
liq	liquid
LOC	lines of communication
LOGSEC	logistics security
LRP	long-range plan
LSTA	logistics-security threat assessment

LVOSS	Light-Vehicle Obscuration Smoke System
LZ	landing zone
M/O	marksman/observer
M/S	mobility/survivability
MACOM	major Army command
MAJ	major
MCRP	Marine Corps reference publication
MCS	Maneuver Control System
MDMP	military decision-making process
mech	mechanized
MEDEVAC	medical evacuation
METL	mission-essential task list
METT-TC	mission, enemy, terrain, troops, time available, and civilian considerations
MEVA	mission-essential or vulnerable area
MFPU	major fraud procurement unit
MI	military intelligence
MILCOM	military community
min	minimum
MKT	mobile kitchen trailer
MLRS	Multiple-Launch Rocket System
MMS	maneuver and mobility support

MOB	main operating base
MOOTW	military operations other than war
MP	military police
MPBTF	military police brigade task force
MPMIS	Military Police Management Information System
MQS	military qualification standards
MSR	main supply route
MTOE	modified table of organization and equipment
MTP	mission training plan
MTT	mobile training team
MWD	military working dog
NATO	North Atlantic Treaty Organization
naut	nautical
NBC	nuclear, biological, and chemical
NCO	noncommissioned officer
NEO	noncombatant evacuation operation
NG	national guard
NGO	nongovernmental organization
NIBRS	National Incident-Based Reporting System
NLT	not later than
NLT	nonlethal weapon

NWP	Naval warfare publication
OCONUS	outside the continental US
OPCON	operational control
OPLAN	operation plan
opns	operations
OPSEC	operations security
ORS-2W	Offense Reporting Systems Windows
PASE	port-area support element
PCIR	police/criminal information requirements
PDF	Panamanian Defense Force
PEO	peace-enforcement operation
PI	police intelligence
PIAP	police information assessment process
PIO	police intelligence operations
PIR	priority intelligence requirements
PKO	peacekeeping operation
plt	platoon
PM	provost marshal
POC	point of contact
POD	port of debarkation
POE	port of embarkation
POL	petroleum, oil, and lubricants

PRC populace and resource control

PSD protective security detail

PSU protective-service unit

PSVA personal-security vulnerability assessment

PSYOP psychological operations

pub publication

PWIS-3 Prisoner-of-War Information System

PZ pickup zone

R&S reconnaissance and surveillance

RAOC rear-area operations center

RC reserve component

ROC rear operations center

ROE rules of engagement

rqmt requirement

RSOI reception, staging, onward movement, and integration

RSTA reconnaissance, surveillance, and target acquisition

RWS remote workstation

S1 Adjutant (US Army)

S2 Intelligence Officer (US Army)

S3 Operations and Training Officer (US Army)

S4 Supply Officer (US Army)

S5	Civil-Affairs Officer (US Army)
S6	Communications Officer (US Army)
SALUTE	size, activity, location, unit, time, and equipment
SAW	squad automatic weapon
SCI	sensitive compartmented information
sec	section
SEP	separate
SFC	sergeant first class
SITREP	situation report
SJA	staff judge advocate
SMS	Security Management System
SOC	security-operations cell
SOF	special-operations forces
SOFA	status of forces agreement
SOI	signal operating instructions
SOP	standing operating procedures
SPOD	seaport of debarkation
SPOE	seaport of embarkation
SPOTREP	spot report
spt	support
sq	square

sqd	squad
SRT	special-reaction team
STAMIS	Standard Army Management Information System
stat	statute
STCCS	Strategic Theater Command and Control System
TA	theater Army
TAA	tactical assembly area
TAACOM	Theater Army Area Command
TAC	tactical
TACCIMS	Theater Automated Command and Control Information Management System
TASE	TSC-area support element
TC-AIMS	Transportation Coordinator Automated Movement Server
TCF	tactical combat force
TCP	traffic-control post
TF	task force
THREATCON	threat condition
TM	technical manual
TMO	traffic-management officer
tms	teams
TO	theater of operations
TOE	tables of organization and equipment

TRADOC	US Army Training and Doctrine Command
TRP	traffic-regulation plan
TSA	theater storage area
TSC	theater support command
TSE	tactical support element
TTP	tactics, techniques, and procedures
UMT	unit ministry team
UN	United Nations
US	United States
USACIDC	US Army Criminal Investigation Command
USACIL	US Army Criminal Investigations Laboratory
USAF	US Air Force
USAMPS	US Army Military Police School
USC	US Code
USCG	United States Coast Guard
USCS	US Customs Service
USDA	US Department of Agriculture
VIP	very important person
VRS	Vehicle Registration System
WMCCS	Worldwide Military Command and Control System

Bibliography

AR 15-6. *Procedures for Investigating Officers and Boards of Officers.* 11 May 1988.

AR 190-12. *Military Police Working Dogs.* 30 September 1993.

AR 190-45. *Law Enforcement Reporting.* 30 September 1988.

AR 190-47. *The Army Corrections System.* 15 August 1996.

AR 195-2. *Criminal Investigation Activities.* 30 October 1985.

AR 525-13. *Antiterrorism/Force Protection (AT/FP): Security of Personnel, Information, and Critical Resources.* 10 September 1998.

CIDR 195-1. *Special Agent Operations Manual.* October 1994.

DA Form 2028. *Recommended Changes to Publications and Blank Forms.* 1 February 1974.

FM 3-0. *Operations.* To be published within the next 6 months.

FM 19-1. *Military Police Support for the AirLand Battle.* 23 May 1988.

FM 19-4. *Military Police Battlefield Circulation Control, Area Security, and Enemy Prisoner of War Operations.* 7 May 1993.

FM 19-10. *The Military Police Law and Order Operations.* 30 September 1987.

FM 19-40. *Enemy Prisoners of War, Civilian Internees and Detained Persons.* 27 February 1976.

FM 34-2. *Collection Management and Synchronization Planning.* 8 March 1994.

FM 34-130. *Intelligence Preparation of the Battlefield.* 8 July 1994.

FM 41-10. *Civil Affairs Operations.* 14 February 2000.

FM 63-4. *Combat Service Support Operations—Theater Army Area Command.* 24 September 1984.

FM 71-3. *The Armored and Mechanized Infantry Brigade.* 8 January 1996.

FM 71-100. *Division Operations.* 28 August 1996.

FM 90-13-1. *Combined Arms Breaching Operations.* 28 February 1991.

FM 90-40. *Multiservice Procedures for the Tactical Employment of Nonlethal Weapons (NLW) {MCRP 3-15.8; NWP 3-07-31; USCG Pub 3-07.31}.* 6 October 1998.

FM 100-1. *The Army.* 14 June 1994.

FM 100-5. *Operations.* 14 June 1993.

FM 100-8. *The Army in Multinational Operations.* 24 November 1997.

FM 100-10. *Combat Service Support.* 3 October 1995.

FM 100-15. *Corps Operations.* 29 October 1996.

FM 100-17-3. *Reception, Staging, Onward Movement, and Integration.* 17 March 1999.

FM 101-5. *Staff Organization and Operations.* 31 May 1997.

FM 101-5-1. *Operational Terms and Graphics {MCRP 5-2A}.* 30 September 1997.

JP 3-10. *Joint Doctrine for Rear Area Operations.* 28 May 1996.

USC Title 18. *Crimes and Criminal Procedure.* 23 January 2000.

USC Title 32. *National Guard.* 5 January 1999.

Index

A

AATF. *See* air-assault task force (AATF).
ADC. *See* area damage control (ADC).
air-assault division, 7-7
air-assault task force (AATF), 7-7
air-base defense, 4-7
airborne division, 7-6
alternate supply route (ASR), 4-2, 4-5
ammunition supply point (ASP), 4-7
antiterrorism, 12-3
AOE. *See* Army of Excellence (AOE).
AOR. *See* area of responsibility (AOR).
area damage control (ADC), 4-6
area of responsibility (AOR), 1-3
area security (AS), 1-1, 3-3, 3-8, 4-3, 4-6—4-9, 5-2, 7-7, 10-1
area support group (ASG), 3-7
Army information systems, D-1
Army of Excellence (AOE), 7-5, 7-6, 7-8, 7-10, 9-5
Army service component command (ASCC), 1-4, 1-5, 1-6, 5-1, 5-5
AS. *See* area security (AS).
ASCC. *See* Army service component command (ASCC).
ASG. *See* area support group (ASG).
ASP. *See* ammunition supply point (ASP).
ASR. *See* alternate supply route (ASR).
asymmetric threat, 3-5
augmentation, 7-4, 7-5, 8-1, 8-2, 8-4, 11-6
automated systems, D-5

B

band, 7-3
base cluster, 3-7, 4-7
base defense, 4-7
battle command, 1-2, 2-1
battlefield,
  circulation and control, 1-1
  effects, 4-14
  environment, 4-14
  missions, 1-2
  organization, 1-4—1-7
  visualization, 2-1—2-2
battlefield workload analysis (BWA), 1-7, C-1
BCT. *See* brigade combat team (BCT).
breaching operations, 4-2, 4-3, 7-4
brigade combat team (BCT), 7-7
BWA. *See* battlefield workload analysis (BWA).

C

C^2. *See* command and control (C^2).
capabilities, 1-2
CCIU. *See* computer-crime investigative unit (CCIU).
centralized MACOM, 9-2
CI. *See* civilian internee (CI).
CID. *See* Criminal Investigation Division (CID).
CIP. *See* Criminal Intelligence Program (CIP).
civil affairs, 4-5, 4-13
civil disturbances, 3-3, 4-11
civil-military operations center (CMOC), 1-8, 4-13
civilian internee (CI), 1-7, 1-8, 4-9, 4-10, 5-4, 5-5
CMOC. *See* civil-military operations center (CMOC).
COA. *See* course of action (COA).
collection point, 4-4, 6-5, 7-5
collection strategy, E-4
combat zone (CZ), 1-4, 1-7, 4-4
combating terrorism, 11-8—11-9
Combating Terrorism Program, 4-13
command and control (C^2), 2-2, 7-2, 9-2
commander's intent, 2-2
communications zone (COMMZ), 1-4, 1-5, 3-6, 4-4, 5-2
COMMZ. *See* communications zone (COMMZ).
computer-crime investigative unit (CCIU), 9-6
concept of operations, 2-2
confinement, 4-10
contiguous, 1-4, 3-7
control element, 6-3
convoy security, 4-8
corps rear area, 3-6
corps support command (COSCOM), 5-2, 6-4
corps support group (CSG), 3-7
COSCOM. *See* corps support command (COSCOM).
counterdrug operations, 11-7
countering the threat, 3-7
course of action (COA), 2-3, 4-14
CRC. *See* Crime Records Center (CRC).
Crime Records Center (CRC), 9-7—9-8
crime threat analysis, 4-13
criminal activities, 3-3
criminal intelligence (CRIMINTEL), 9-1, 9-2, 9-3, D-6
Criminal Intelligence Program (CIP), 4-13
criminal investigation, 4-11—4-12, 9-2
Criminal Investigation Division (CID), 1-6, 3-6
CRIMINTEL. *See* criminal intelligence (CRIMINTEL).
CSG. *See* corps support group (CSG).
customs team, 1-5, 1-7, 4-11, 5-2
CZ. *See* combat zone (CZ).

D

defeat, 4-6
defense plans, 3-7
delay, 4-6
detainees, 11-17
digitization, 7-11
direct support (DS), 2-3

disaster,
man-made, 1-2
natural, 1-2
relief, 11-4—11-6
DISCOM. *See* division support command (DISCOM).
dislocated civilian, 1-7, 1-8, 4-4, 4-5, 6-5, 11-17
distributed, 7-8
diversionary attacks, 3-6
division MP company, 7-2—7-3
division rear area (DRA), 3-6
division support area (DSA), 7-5
division support command (DISCOM), 5-2, 7-2
Division XXI, 7-1, 7-8—7-11
divisional brigade, 8-2
doctrinal publications, B-1
doctrine, B-1
DRA. *See* division rear area (DRA).
DS. *See* direct support (DS).
DSA. *See* division support area (DSA).

E

EAC. *See* echelons above corps (EAC).
echelons above corps (EAC), 5-1
effective coordination, 11-5
enemy-controlled agents, 3-3
enemy priority target, 3-5
enemy prisoner of war (EPW), 1-1, 1-7, 1-8, 4-9, 4-10, 5-4, 5-5, 7-11
enemy sympathizers, 3-3
EPW. *See* enemy prisoner of war (EPW).
escort-guard company, 1-7, 5-6
espionage, 3-3

F

FBCB2. *See* Force XXI battle command—brigade and below (FBCB2).
FEBA. *See* forward edge of the battle area (FEBA).
field investigative unit (FIU), 9-6
FIU. *See* field investigative unit (FIU).
FOB. *See* forward operating base (FOB).
force-projection doctrine, 1-2
force-protection, 1-2, 3-3, 4-11, 7-11, 12-1
Force XXI, 1-3, 9-5
Force XXI battle command—brigade and below (FBCB2), 7-10
forced-entry operations, 7-1
forensic laboratory, 9-7
forward edge of the battle area (FEBA), 3-5
forward operating base (FOB), 7-6, 7-7
forward support battlation (FSB), 7-10
forward support company (FSC), 7-10
FSB. *See* forward support battalion (FSB).
FSC. *See* forward support company (FSC).
functional-area considerations, 8-3

G

general support (GS), 2-3
Geneva convention, 5-5
GO. *See* government organization (GO).
government organization (GO), 1-8
GS. *See* general support (GS).
guard company, 1-7
guerilla forces, 3-3

H

heavy division, 7-4—7-5
high-risk personnel (HRP), 4-6, 4-8, 12-2
high-value asset (HVA), 3-5, 3-6, 7-10
holding area, 4-2, 6-4
HRP. *See* high-risk personnel (HRP).
humanitarian assistance, 11-4—11-6
HVA. *See* high-value asset (HVA).

I

I/R. *See* internment and resettlement (I/R).
IBCT. *See* initial/interim brigade combat team (IBCT).
IHO. *See* international humanitarian organization (IHO).
initial-entry force, 8-1
initial/interim brigade combat team (IBCT), 1-7, 8-1, 8-2—8-5
integrated, 7-8
intelligence preparation of the battlefield (IPB), 2-3, 4-13, 4-14, 6-3, E-1
interagency operations, 1-7
intermediate staging base (ISB), 7-6
international humanitarian organization (IHO), 1-8
international organization (IO), 1-8
internment and resettlement (I/R), 1-2, 4-9—4-10, 10-1
investigative team, 9-5
IO. *See* international organization (IO).
IPB. *See* intelligence preparation of the battlefield (IPB).
ISB. *See* intermediate staging base (ISB).

L

L&O. *See* law and order (L&O).
language aids, E-3
law and order (L&O), 1-1, 1-5, 4-10—4-12
law enforcement, 4-11, 12-2—12-3, E-4
LID. *See* light infantry division (LID).
light infantry division (LID), 7-5—7-6
lines of communications (LOC), 1-4, 4-2, 5-2, 6-4
LOC. *See* lines of communication (LOC).
logistics security (LOGSEC), 4-12, 7-1, 9-1, 9-2
logistics security threat assessment, 4-13
LOGSEC. See logistics security (LOGSEC).
long-range plans (LRP), 6-2
LRP. *See* long-range plans (LRP).

M

M/O. *See* marksman/observer (M/O).
main supply route (MSR), 4-2, 4-3, 4-5, 5-3
maneuver and mobility support (MMS), 1-2, 3-8, 4-2—4-6, 4-11, 5-2, 7-7, 10-1
marksman/observer (M/O), 4-11
MDMP. *See* military decision-making process (MDMP).
METL. *See* mission-essential task list (METL).
METT-TC. *See* mission, enemy, terrain, troops, time available, and civilian considerations (METT-TC).

MEVA. *See* mission-essential or vulnerable area (MEVA).
MI. *See* military intelligence (MI).
military decision-making process (MDMP), 7-10
military intelligence (MI), 3-6, E-4
military operations other than war (MOOTW), 3-3, 9-4, 9-6
military police
automated systems, D-4
availability, 3-9
battalion (CS), 11-15
battalion (I/R), 5-6—5-8
brigade, 11-13
brigade (CS), 5-2—5-4, 6-1—6-2
brigade (I/R), 5-4—5-6
company, 11-15
dispersion, 3-9
functions, 1-2, 4-1
I/R units, 11-16—11-17
Military Police Management Information System (MPMIS), D-5
military prisoners, 4-10, 5-4
military working dog (MWD), 4-5, 4-7, 4-11, 4-12, 5-2, 5-3, 6-2
mission analysis, E-2
mission, enemy, terrain, troops, time available, and civilian considerations (METT-TC), 1-5, 1-7, 1-8, 2-3, 4-3, 5-2, 5-3, 6-4, 7-2, 9-5
mission-essential or vulnerable area (MEVA), 12-2
mission-essential task list (METL), 8-3
MMS. *See* maneuver and mobility support (MMS).
modified table of organization and equipment (MTOE), 1-5
MOOTW. *See* military operations other than war (MOOTW).
MPMIS. *See* Military Police Management Information System (MPMIS).
MSR. *See* main supply route (MSR).
MTOE. *See* modified table of organization and equipment (MTOE).
multidimensional, 7-8
multifunctional capabilities, 1-8
multinational operations, 1-7
MWD. *See* military working dog (MWD).

N

NBC. *See* nuclear, biological, and chemical (NBC).
NEO. *See* noncombatant evacuation operation (NEO).
neutrality, 11-5
NGO. *See* nongovernmental organization (NGO).
NLW. *See* nonlethal weapon (NLW).
noncombatant evacuation operation (NEO), 11-9
noncontiguous, 1-4, 3-7
nongovernmental organization (NGO), 1-6, 1-8
nonlethal weapon (NLW), 11-13
nonlinear, 7-8
nuclear, biological, and chemical (NBC), 3-4, 4-4

O

objectivity, 11-5
OPCON. *See* operational control (OPCON).
open-source information, E-3
operational control (OPCON), 2-2, 4-2, 5-2
operational framework, 1-3—1-4
operational unity, 11-5
operations,
combat, 1-7, 2-3, 4-2, 6-3
combat service support (CSS), 1-7, 2-3, 4-2, 6-3
combat support (CS), 1-7, 2-3, 4-2, 6-3
confinement, 5-7—5-8
decisive, shaping, and sustaining (DSS), 1-4
defensive, 10-1, 10-3
offensive, 10-1—10-2
protective service, 9-3
rear area, 3-1—3-2, 3-7, 4-7, 4-8
reconnaissance, 3-6, 4-6—4-7
resettlement, 5-7
river crcossing, 4-2
security, 5-2
security-assistance, 11-9—11-11
stability, 1-2, 8-4, 11-1, 11-3, 11-15
support, 1-2, 8-4, 11-1, 11-3, 11-15
sustainment, 3-1—3-2, 3-7, 4-7, 4-8
operations security (OPSEC), 1-8, E-3
OPSEC. *See* operations security (OPSEC).

P

passage of lines, 4-2, 4-3—4-4
PCIR. *See* police/criminal information requirements (PCIR).
peacekeeping operation (PKO), 11-11—11-13
peacetime engagement operations, 3-1
personal-security vulnerability assessment (PSVA), 4-13
physical security, 3-3, 12-1—12-2
PIAP. *See* police information assessment process (PIAP).
PIO. *See* police intelligence operations (PIO).
PIR. *See* priority intelligence requirements (PIR).
PKO. *See* peacekeeping operation (PKO).
planning element, 6-3
POD. *See* port of debarkation (POD).
POE. *See* port of embarkation (POE).
police/criminal information requirements (PCIR), 4-17
police information assessment process (PIAP), 2-3, 4-15, 4-17, 6-3, E-1
police intelligence operations (PIO), 1-2, 3-8, 4-13—4-18
active mode, 4-17
passive mode, 4-15
populace and resource control (PRC), 4-10
port of debarkation (POD), 5-6
port of embarkation (POE), 5-6
positive image, 11-5
Posse Comitatus Act, 11-3
PRC. *See* populace and resource control (PRC).
precise, 7-8
priority intelligence requirements (PIR), 4-17
protective-service unit (PSU), 9-6
provost marshal (PM) cell, 2-3
PSU. *See* protective-service unit (PSU).
PSVA. *See* personal-security vulnerability assessment (PSVA).
psychological operations (PSYOP), 4-13, 4-17

PSYOP. *See* psychological operations (PSYOP).
public acceptance, 11-5

R

R&S. *See* reconnaissance and surveillance (R&S).
raid, 4-11
RAOC. *See* rear-area operations center (RAOC).
rear area, 3-1
rear-area operations center (RAOC), 5-3, 5-1, 6-5
rear-area security, 4-7
reception, staging, onward movement, and integration (RSOI), 3-2—3-3
reconnaissance, 4-2, 4-5
  area, 4-6
  zone, 4-6
reconnaissance and surveillance (R&S), 4-5, 7-11, 10-3
reconnaissance, surveillance, and target acquisition (RSTA), 8-3
refugees, 1-8, 6-5
replacement unit, 4-4
response force, 3-7—3-8, 4-6, 4-8
river-crossing operations, 4-2, 7-4
ROE. *See* rules of engagement (ROE).
RSOI. *See* reception, staging, onward movement, and integration (RSOI).
RSTA. *See* reconnaissance, surveillance, and target acquisition (RSTA).
rules of engagement (ROE), 11-1, 11-9

S

sabotage, 3-3
security, 4-8
security force, 4-7
separate brigades, 8-1—8-2
simultaneous, 7-8
situational awareness, 2-1, 3-6
small tactical units, 3-4
special-reaction team (SRT), 4-11
SRT. *See* special-reaction team (SRT).
staff relationships, 2-3
Stafford Act, 11-3
staging area, 4-2
straggler control, 4-4, 6-5
subversion, 3-3
support functions, 3-1
support relationships, 2-3

T

TAA. *See* tactical assembly area (TAA).
tables of organization and equipment (TOE), 7-2, 7-3
tactical assembly area (TAA), 7-7
tactical combat force (TCF), 3-8
tactics, techniques, and procedures (TTP), B-1—B-2
TCF. *See* tactical combat force (TCF).
TCP. *See* traffic control post (TCP).
terrorism, 3-3, 12-3
theater of war, 1-4, 1-5
theater support command (TSC), 1-4, 1-5, 1-6, 5-1
threat,
  awareness, 11-5
  level, 3-3—3-4
  location, 3-5—3-7
  priorities, 3-4—3-5
threat-level matrix, 3-4
TOE. *See* tables of organization and equipment (TOE).
traffic-control post (TCP), 4-2, 4-3, 4-5
traffic-regulation plan (TRP), 4-5
TRP. *See* traffic-regulation plan (TRP).
TSC. *See* theater support command (TSC).
TTP. *See* tactics, techniques, and procedures (TTP).

U

unconventional forces, 3-4
United States Army Criminal Investigation Command (USACIDC), 4-12, 9-1, E-4
  agents, 11-7
  organization, 9-4—9-6
  wartime support, 9-2—9-4
United States Army Criminal-Investigations Laboratory (USACIL), 9-7
United States Customs Service (USCS), 4-12
USACIDC. *See* United States Army Criminal Investigation Command (USACIDC).
USACIL. *See* United States Army Criminal-Investigations Laboratory (USACIL).
USCS. *See* United States Customs Service (USCS).
use of force, 11-5