Conversion - 113 units
3RC – 3 Bed to 4 Bed (2164 sq. ft.)

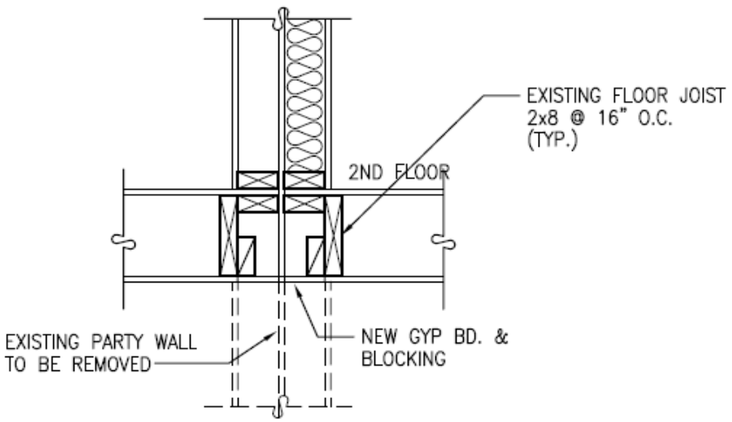

1 **SECTION @ PARTY WALL – NON LOAD BEARING**
SCALE: 1" = 1'-0"

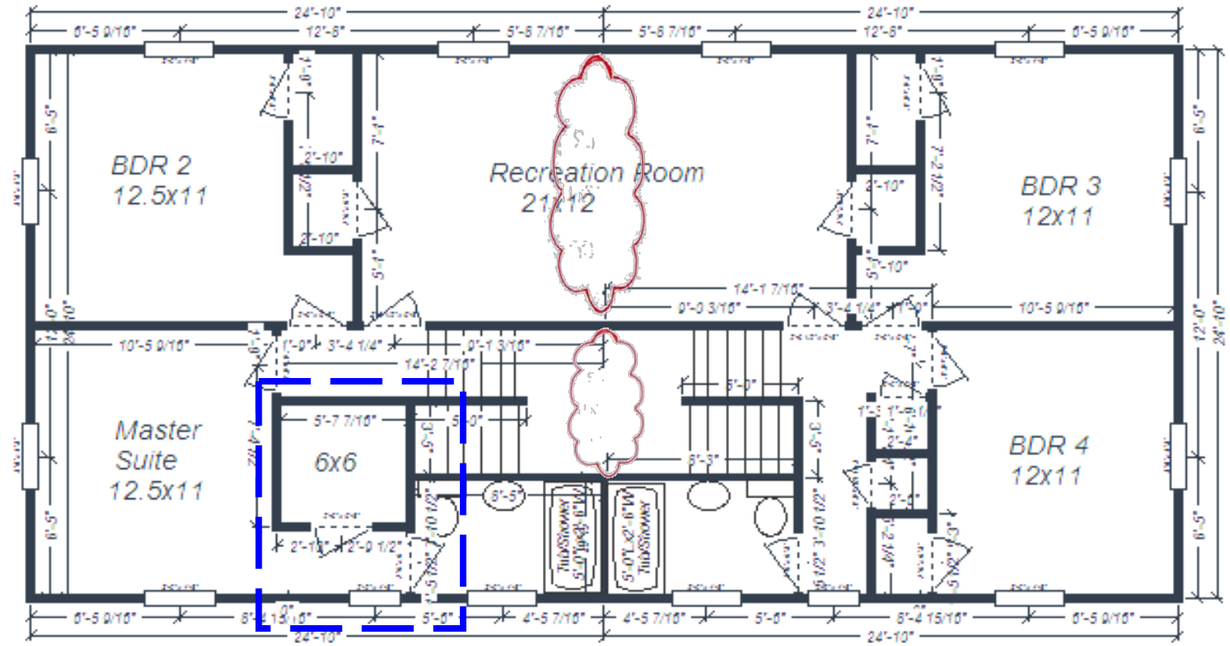

3RC - 4 Bdr Second Floor

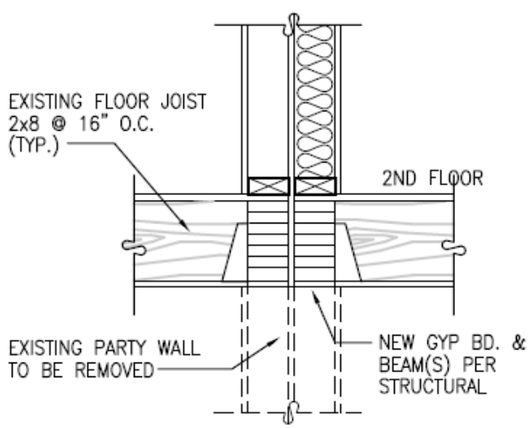

2 **SECTION @ PARTY WALL – LOAD BEARING**
SCALE: 1" = 1'-0"

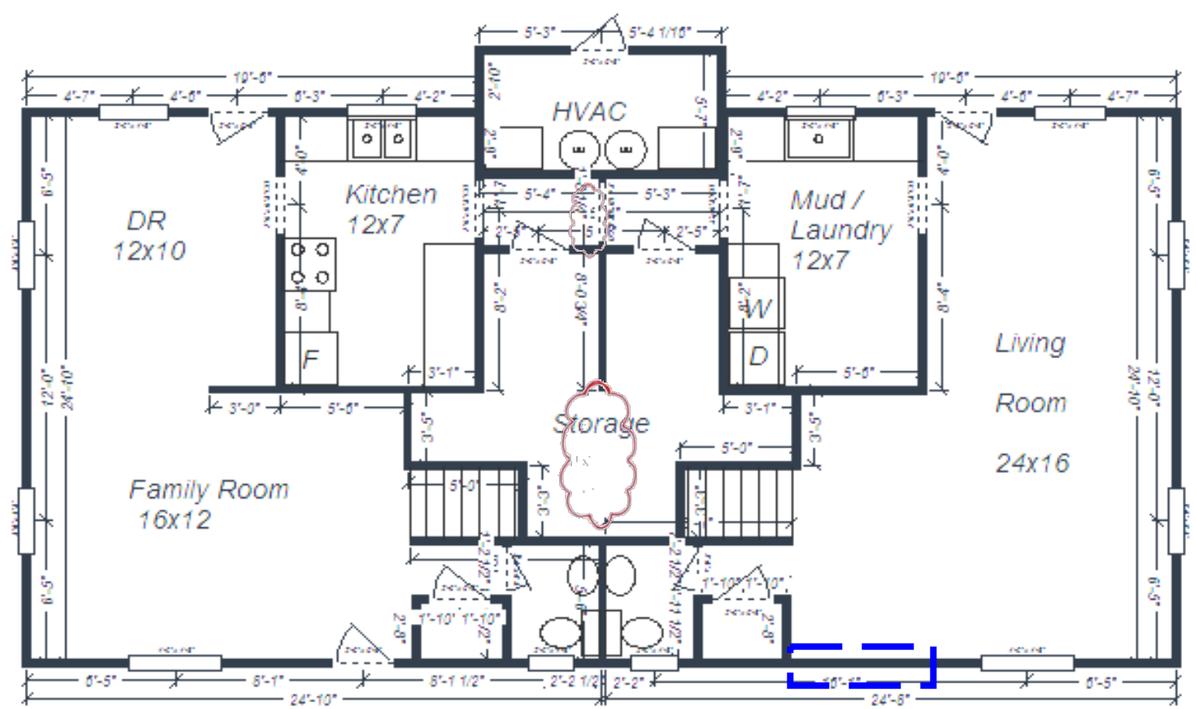

3RC - Conversion to 4 Bdr 1st Floor

1 Close old entry door add window

2 Construct 2nd floor master suite

Balfour Beatty Communities

Fort Leonard Wood, MO

Date: 27 JUNE 2008

Scale: NOT TO SCALE

Size: 11 X 17

Revised: 10 APR 2009

Drawing: 30