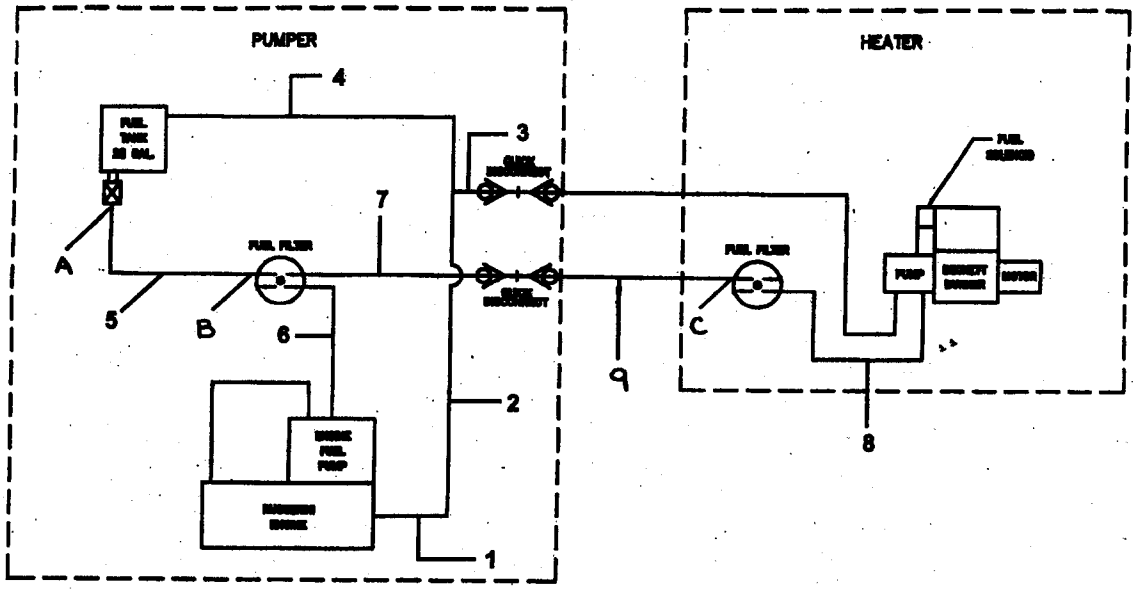FUEL FLOW DIAGRAM M12A1 UPGRADE