Conversion -120 units
3IC – 3 Bed to 4 Bed (1884 sq. ft.)

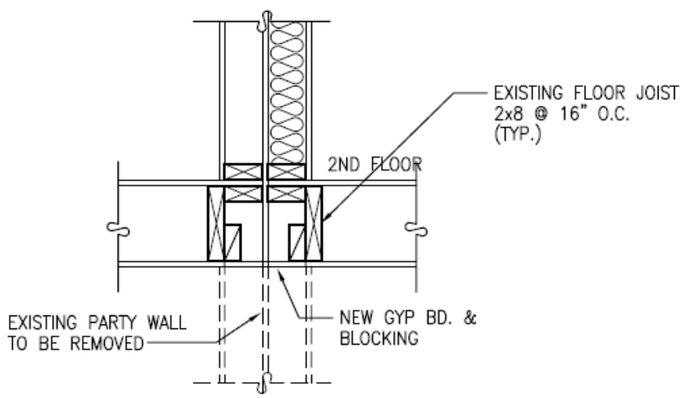

1 SECTION @ PARTY WALL – NON LOAD BEARING
SCALE: 1"=1'-0"

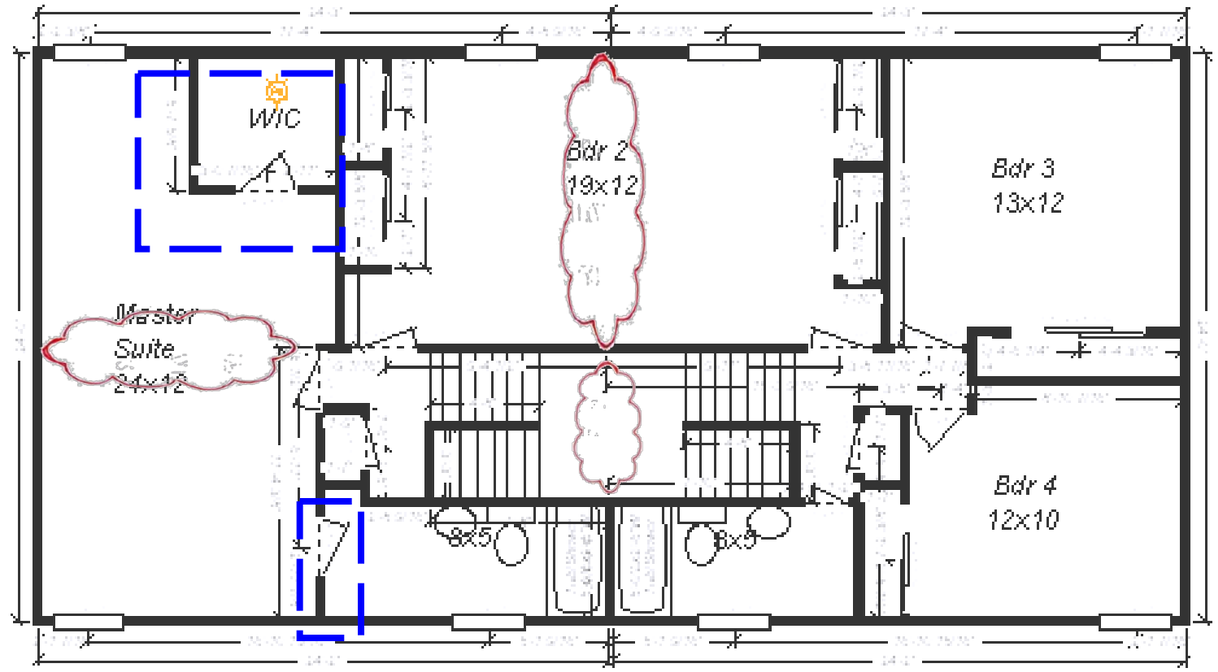

3IC - Conversion to 4 Bdr Second Floor

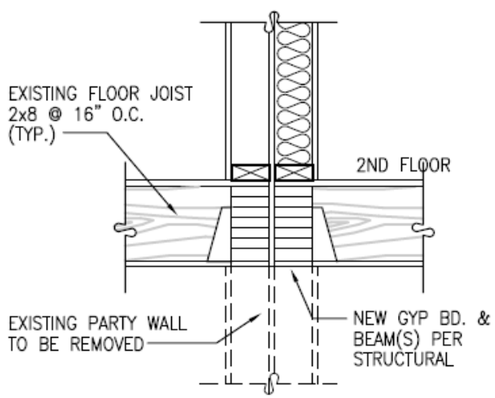

2 SECTION @ PARTY WALL – LOAD BEARING
SCALE: 1"=1'-0"

1 Close old entry door add window

2 Add 2nd floor walk-in closet

3 Door to Master bath

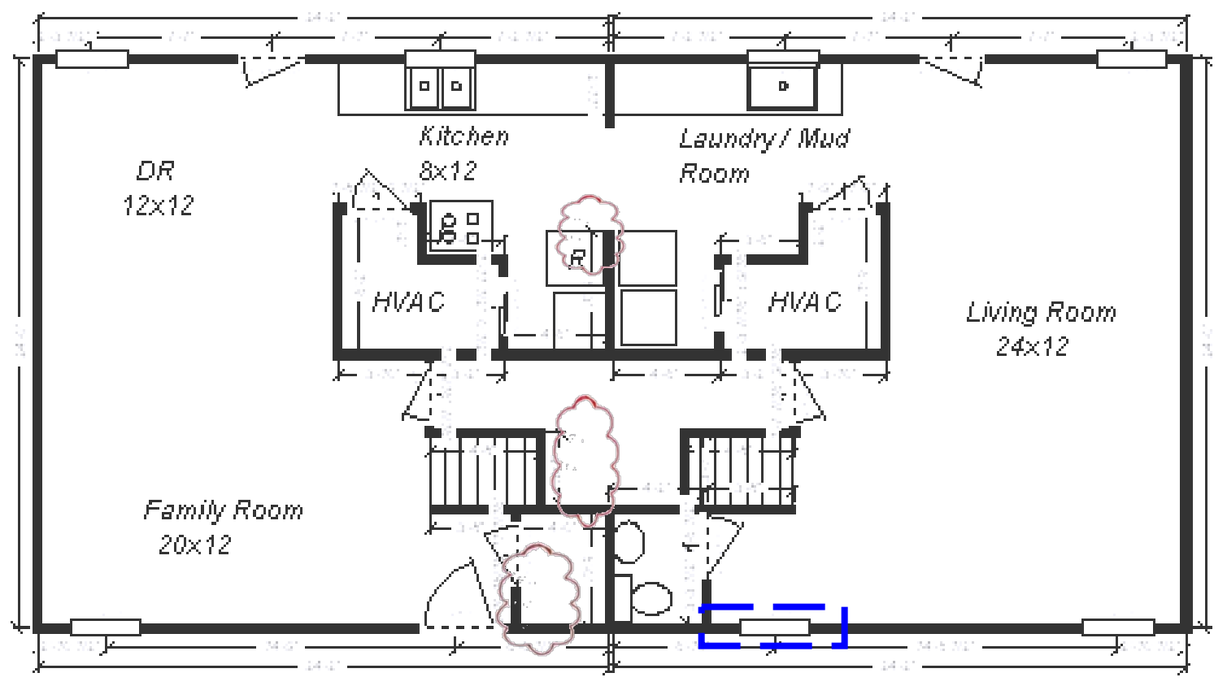

3I C - Conversion to 4 Bdr First Floor

Balfour Beatty Communities

Fort Leonard Wood, MO

Date: 27 JUNE 2008

Scale: NOT TO SCALE

Size: 11 X 17

Revised: 10 APR 2009

Drawing: 29