Conversion - 52 units
3PC - 3 Bed to 4 Bed (2170 sq. ft.)

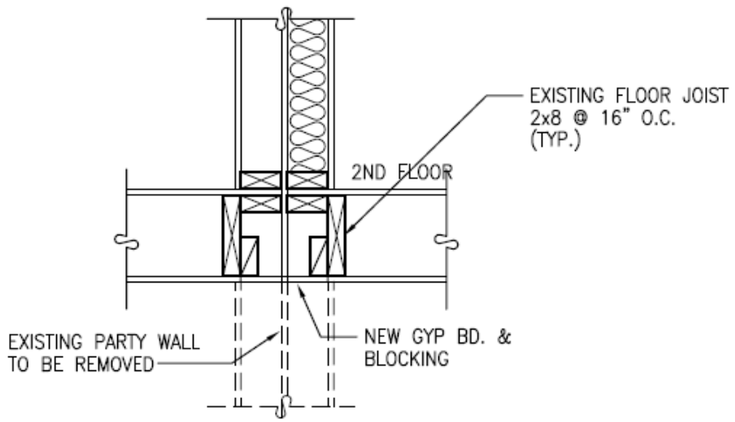

1 **SECTION @ PARTY WALL – NON LOAD BEARING**
SCALE: 1" = 1'-0"

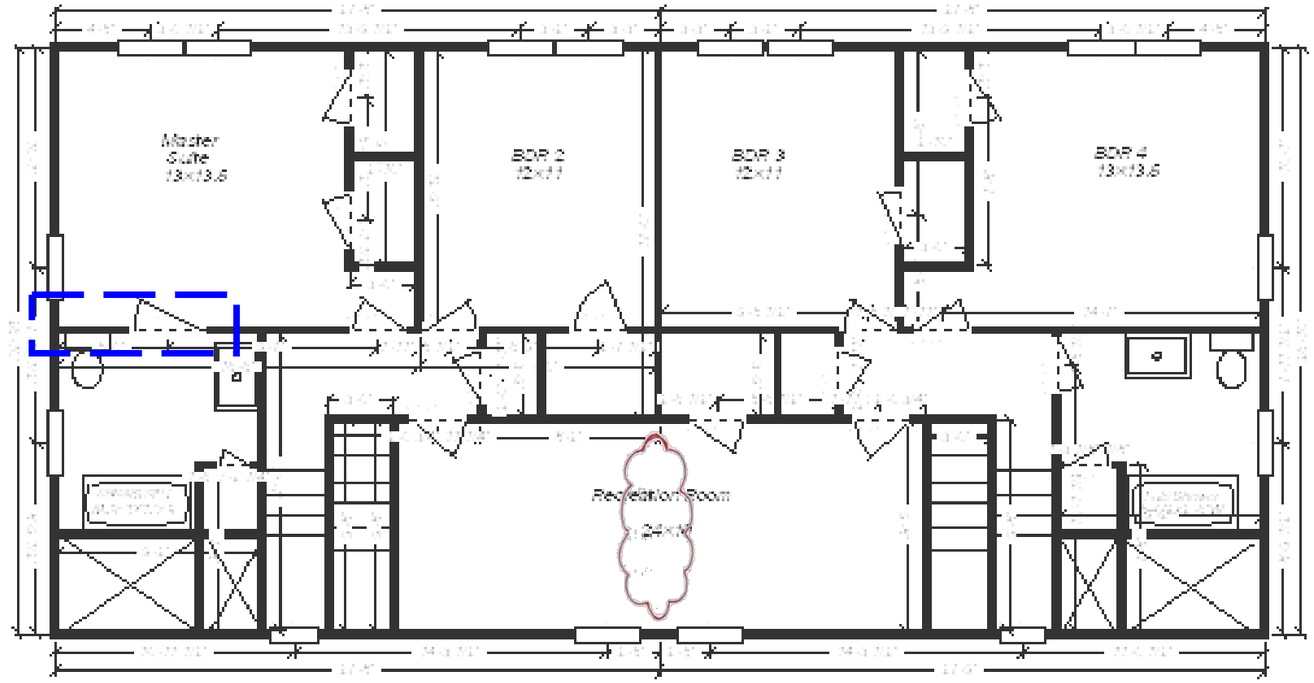

3PC - Conversion 4 Bdr 2nd Floor

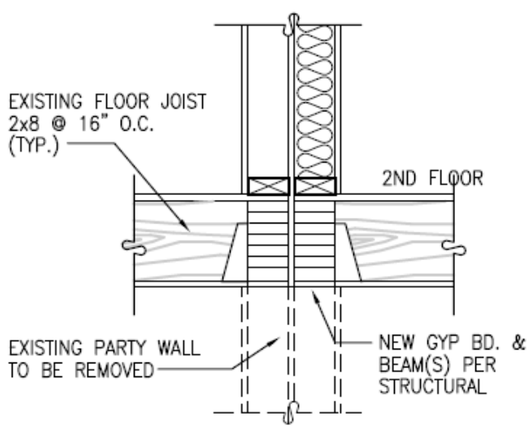

2 **SECTION @ PARTY WALL – LOAD BEARING**
SCALE: 1" = 1'-0"

1 Close old entry door add window

2 Construct 2nd floor master suite

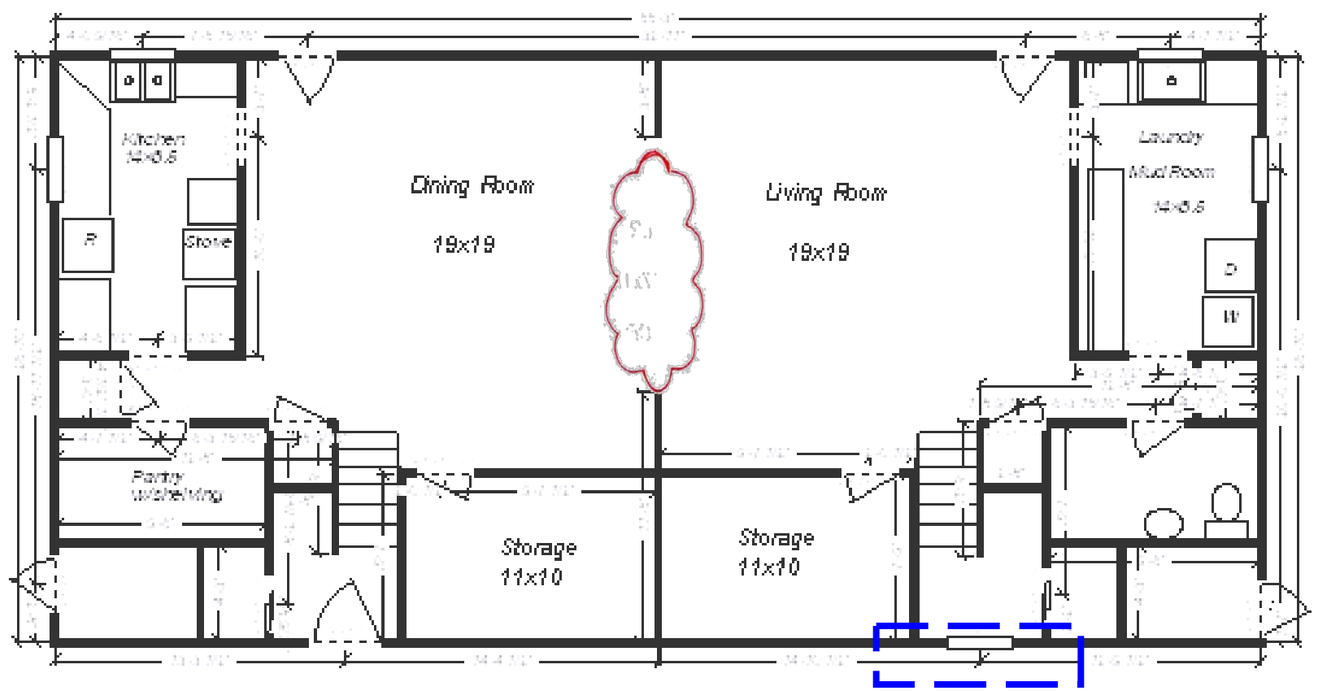

3PC - Conversion 4 Bdr 1st Floor

Balfour Beatty Communities

Fort Leonard Wood, MO

Date: 27 JUNE 2008

Scale: NOT TO SCALE

Size: 11 X 17

Revised: 10 APR 2009

Drawing: 31