OSHKOSH M1070

HEAVY EQUIPMENT TRANSPORTER SPECIFICATIONS

ISO CERTIFIED 9001

Oshkosh Truck Corporation

ADVANCING TRUCK TECHNOLOGY

OSHKOSH®

OSHKOSH HET M1070

HEAVY EQUIPMENT TRANSPORTER

The Heavy Equipment Transporter System (HETS) is primarily designed to haul the M1A1 main battle tank, but also transport other tanks, fighting and recovery vehicles, self-propelled howitzers, and construction equipment. The Oshkosh eight-wheel drive M1070 tractor features a 500 horsepower engine ensuring maximum speed and grade climbing performance, central tire inflation for all-terrain mobility, and a six-person cab for convenient tank crew transport. The first and last axles steer, providing enhanced cornering and maneuverablity.

The HETS will be used world-wide on primary, secondary, and unimproved roads and trails in climatic conditions ranging from -50° F to 120° F. When the HETS is fully loaded, the system's operating range is 325 miles at a gross combination weight of 231,400 lbs. The highly mobile HETS delivers equipment where needed, when needed, at much lower life cycle costs. With the HETS, equipment and crews arrive for battle in a high state of operational readiness.

■ AXLES

Axle Configuration - 8 x 8 • Four axles • 1 and 4 steering

Make and Model - Rockwell SVI 5MR

Capacity - 12 metric tons

Type - Driving • Planetary hub reduction • Double cardan joint steering axles • 30/70 torque split on axle 2

Inter-Axle Differential Lock - Manual control

Gear Ratios -
Final - 7.36:1
Differential Carrier - 1.59:1
Planetary Hub - 4.63:1

■ BRAKES, PARKING AND EMERGENCY

Type - Dual air • Spring brakes on axles 2, 3 and 4 • Modulated emergency system

■ BRAKES, SERVICE

Make - Rockwell air actuated S-cam

Type - Internal shoe, air operated dual system

Lining Size - 16.5 x 7 in [419.1 x 177.8 mm]

■ CAB

Construction and Accessories - Extra heavy-duty • Welded steel construction with corrosion-resistant skins • Six (2+4) man • 96 in [2438 mm] cab width • Piano-type door hinges with stainless steel hinge pins • Suspension driver and front passenger seats • Rear bench seat convertible into bunks • Three point seat belts with retractors • Dual sun visors • Windshield washer • Air horns • Heater and defroster • Tinted safety glass throughout • Rear window • Rear view mirrors (2) • Interior light • Two-speed electric windshield wipers

■ CAB (CONTINUED)

Instrumentation - Gauges: Coolant temperature, dual air pressure, engine oil pressure, fuel level, transfer case oil temperature, transmission oil temperature • Tachograph with speedometer and tachometer with 7 day recorder • US/metric gauges • 12 and 24 voltmeters • High coolant temperature warning light • High engine temperature and low oil pressure warning light • Low air pressure warning light • Engine brake indicator light • High beam indicator light • PTO engagement light • Turn signal indicator lights • Driveline lockup light • Two map lights • Air cleaner restriction indicator

■ CENTRAL TIRE INFLATION SYSTEM (CTIS)

Preset Selections - Highway • Cross Country • Mud-Sand-Snow • Emergency

■ CHASSIS EQUIPMENT

Front fiberglass fenders • Heavy-duty front bumper • Front and rear tow eyes • Stowage compartments • Pintle hook • Blackout lights • Front, center and rear marker lights • Front and rear identification and clearance lights • Stop, tail and turn signal lights with four-way flashing front and rear • Two sealed beam headlights • Service/emergency air brake connectors front and rear • Slave start connector • Trailer electrical connectors, 12 and 24 volt • Trailer and auxiliary air supply connection • Spare tire and davit • 250 gal fuel capacity

■ COOLING SYSTEM

Radiator Core - Fin and tube type

Frontal Area - 2,015 in^2 [13 000 cm^2]

Construction - Fabricated top and bottom tanks and side members bolted together to form a rigid frame surrounding the radiator core, built-in deaeration system

Fan - 40 in [1016 mm] eight-blade

Transmission/Converter Oil Cooler - oil-to-water type, located in bottom tank of radiator

■ ELECTRICAL SYSTEM

Alternator -
145 amp, 14 volt
130 amp, 28 volt

Starting/Accessories - 24 volt

Lighting - 12 volt

Batteries - Four 12 volt, 600 CCA each @ 0° F [-17.8° C]

■ ENGINE

Make and Model - Detroit Diesel 8V92TA, DDEC II/DDEC III

Type - V8, two-cycle, turbo charged and aftercooled

Bore - 4.84 in [123 mm]

Stroke - 5.00 in [127 mm]

Displacement - 736 cu in [12.06 liters]

Brake HP* - 500 HP [373 kw] @ 2,100 RPM

Maximum Torque* - 1,470 ft lb [1993 N·m] @ 1,200 RPM

*SAE Standard Conditions - 29.38 in Hg [995 mbar] and 85° F [29° C]

■ FIFTH WHEEL

Fully oscillating, 3.5 in [89 mm] kingpin

■ FRAME

Type - Formed channel, bolted construction with grade 8 bolts

Material - SAE 1027 modified, carbon manganese steel, heat treated

Yield Strength - 110,000 PSI minimum [758 MPa]

Size - 14.00 x 3.50 x .375 in [356 x 89 x 9.5 mm]

Section Modulus - 26.266 in^3 [430 cm^3] per rail

■ PERFORMANCE

Fording - 28 in (711mm)

Gradient - 15% at GCW

Air Transportability - C5A and C17

■ STEERING SYSTEM

Type - Two axle Ackerman (front and rear), integral hydraulic

Steering Gear Ratio -
Front - 20.1:1
Rear - 25.0:1

Rear Steering Reduction Ratio - 2.21:1

Turning Circle - 74 ft [22.5 m] wall-to-wall

■ SUSPENSION

Front - Hendrickson parabolic taper leaf spring

Rear Tridem - Hendrickson-Turner air ride

■ TIRES

Make and Model - Michelin XZLT

Size - 16.00R20

Quantity - Eight plus one spare

■ TRANSFER CASE

Make and Model - Oshkosh 55000

Type - Two speed, air operated front axle disconnect

Ratios - .958:1 and 2.464:1

■ TRANSMISSION

Make and Model - Allison CLT-754

Type - Five speed automatic with TC-496 torque converter, second gear start

Ratios -
Fifth - 1.000:1
Fourth - 1.383:1
Third - 2.021:1
Second - 3.191:1
First - 5.182:1
Reverse - 4.724:1

■ WEIGHTS

Curb Weight (CW) - 41,000 lb [18,598 kg]

Gross Combination Weight (GCW) - 231,400 lb [104 961kg]

Gross Vehicle Weight (GVW) - 86,000 lb [39 009 kg]

Kingpin Load - 45,000 lb [20 411 kg]

■ WHEELBASE

215 in [5461 mm]

■ WHEELS

Type - Two piece bolt-together, steel disc

Size - 20 x 10 in [508 x 254 mm]

■ WINCHES

Automatic internal brake • Double reduction planetary gears • Self-contained hydraulics • Two-speed hydraulic gear motors

Main -
Make and Model - dp Manufacturing, 55K
Capacity - Two winches, each 55,000 lb [24 947 kg]
Cable - 1 in [25 mm] diameter, 170 ft [51.8 m]

Auxiliary -
Make and Model - dp Manufacturing, 3GN
Capacity - 3000 lb [1360 kg]
Cable - .25 in [6 mm] diameter, 300 ft [91.44 m]

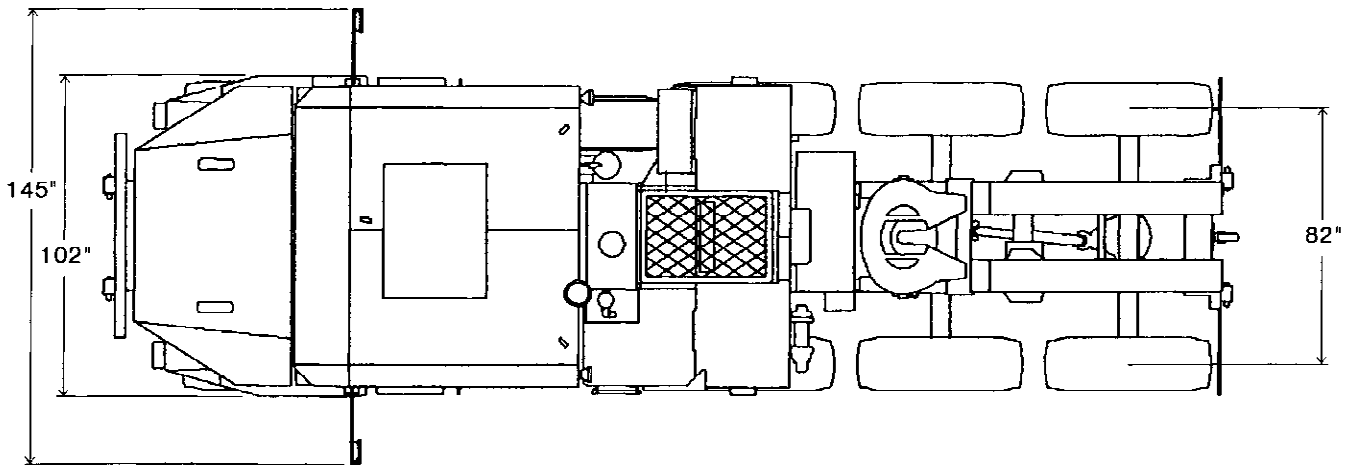

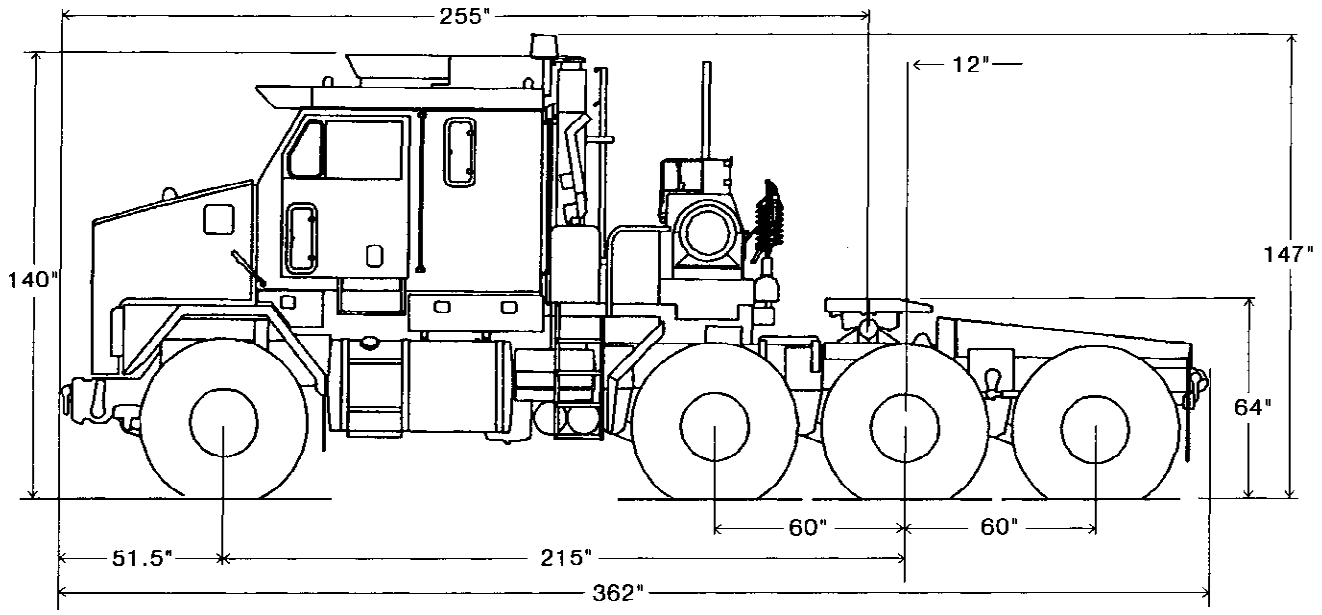

For reference only. The addition of options will change the listed standard dimensions in some cases. For certified dimensions, consult Oshkosh Truck Corporation.

Specifications, descriptions and illustrations in this literature are as accurate as known at the time of publication but are subject to change without notice. Ratings are general guidelines. Actual ratings vary with application and duty cycle.

Illustrations may include optional equipment and accessories but may not include all standard equipment. Consult Oshkosh Truck Corporation for additional information.

OSHKOSH TRUCK CORPORATION
P.O. Box 2566
Oshkosh, Wisconsin 54903-2566 • U.S.A.
(920) 235-9150 FAX (920) 233-9506
http//:www.oshkoshtruck.com